Queen Mary
University of London
Science and Engineering

EBU4202: Digital Circuit Design
Latches and Flip-Flops

Dr. Md Hasanuzzaman Sagor (Hasan)
Dr. Chao Shu (Chao)
Dr. Farha Lakhani (Farha)

School of Electronic Engineering and Computer Science,
Queen Mary University of London,
London, United Kingdom.

Overview: Sequential Logic Design Principles

* Introduction
* Bistable Elements
* Latches & Flip-Flops
* Analysis Procedure
* Design Procedure

Chapter 7 – "Digital Design: Principles and Practices" book

Sequential Circuits (1/2)

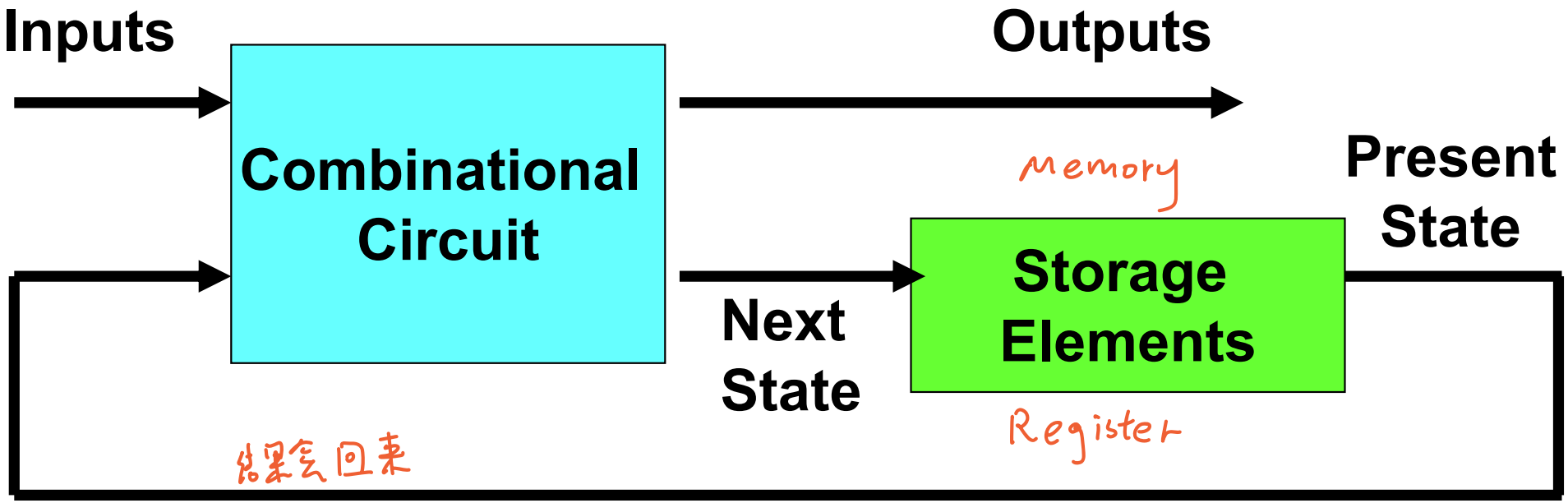

Sequential Circuit

consist of combinational circuits and some form of memory.

a circuit whose outputs depend on current inputs and the past sequence of inputs.

Sequential Circuits (2/2)

- **Sequential systems** consist of *combinational circuits* and some form of *memory*.

- **Memory** can be either:
  - conventional memory devices; ***or***
  - some type of feedback or delay network that serves in place of memory.

- ***Examples*** of **sequential circuits**:
  - Traffic Lights;
  - elevator controller.

Can you think of **other examples**?

Synchronous *vs* Asynchronous

- *Sequential systems* come in two basic forms:
  - ***Synchronous*** → The system's behavior can be defined from the knowledge of its signals at *discrete moments in time*.
  - ***Asynchronous*** → The behavior depends on the order in which inputs change and can be affected at *any instant of time*.

1. How do you think synchronisation is achieved?
2. What do you think may happen with asynchronous systems?

State

- ***State***: The state or characteristics of a circuit are described by the values of its outputs.
  - Given a circuit with **N** outputs, with each taking on a binary value, the circuit has a total of $\mathbf{2^N}$ possible states.
  - A state can be *stable* or *metastable*.

- For a sequential circuit, given the *current state* and *input*, we can predict the *next state*.

Sequential circuits: also called **FSMs** (Finite State Machines).

Clock Signals (1/2)

- ***Characteristics of a clock signal***:
  - Most sequential circuits undergo a state change by a clock signal.
  - A clock signal may be *active high* or *active low*.
  - Its possible states include *high*, *low*, *rising edge*, *falling edge*.
  - Its parameters include *period*, *frequency*, and *duty cycle*.

Period: time between successive transitions in the same direction.

Clock Signals (2/2)

- ***Graphical illustration of a clock signal's operation***:

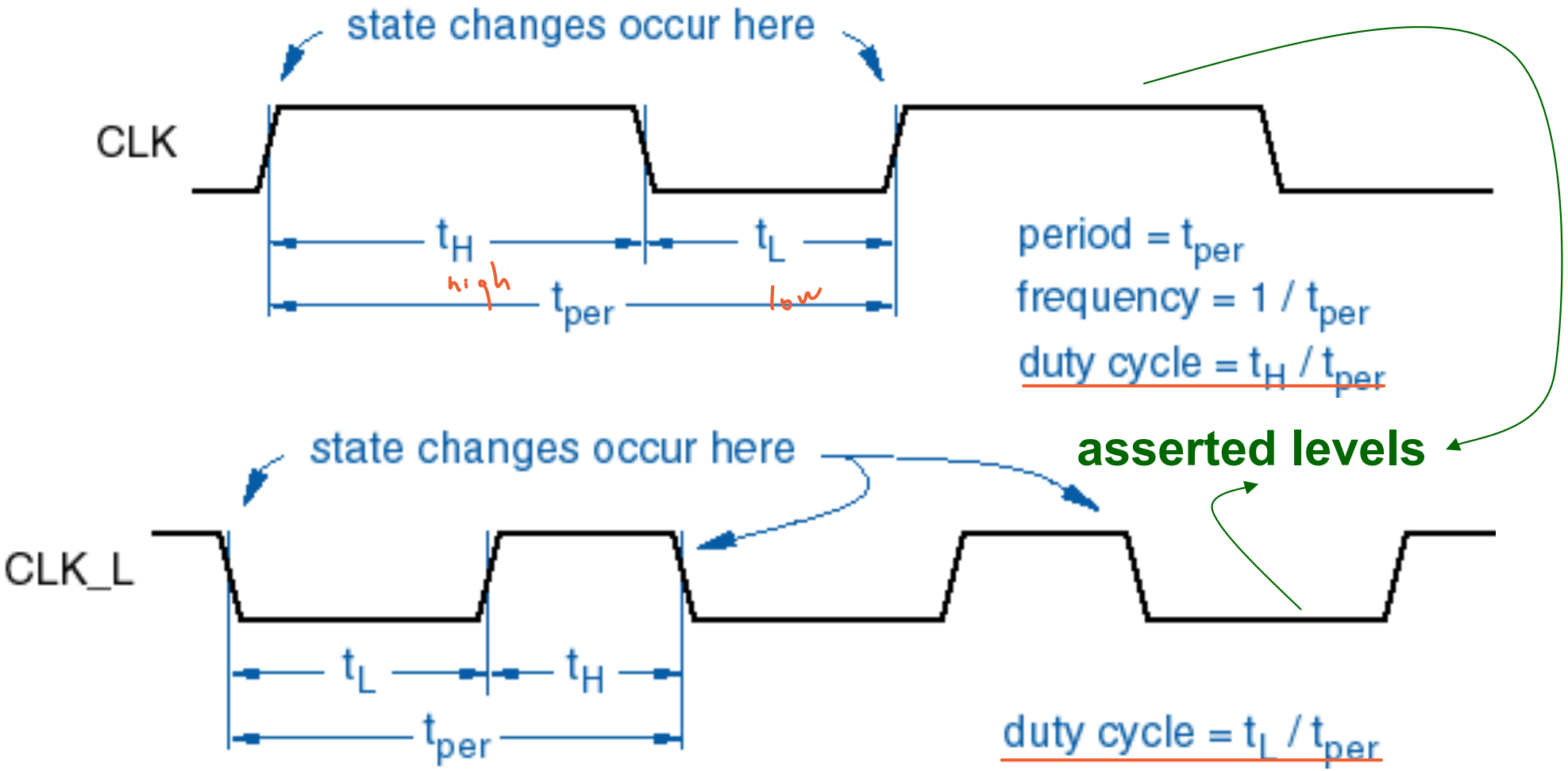

Synchronous Clocked Sequential Circuit

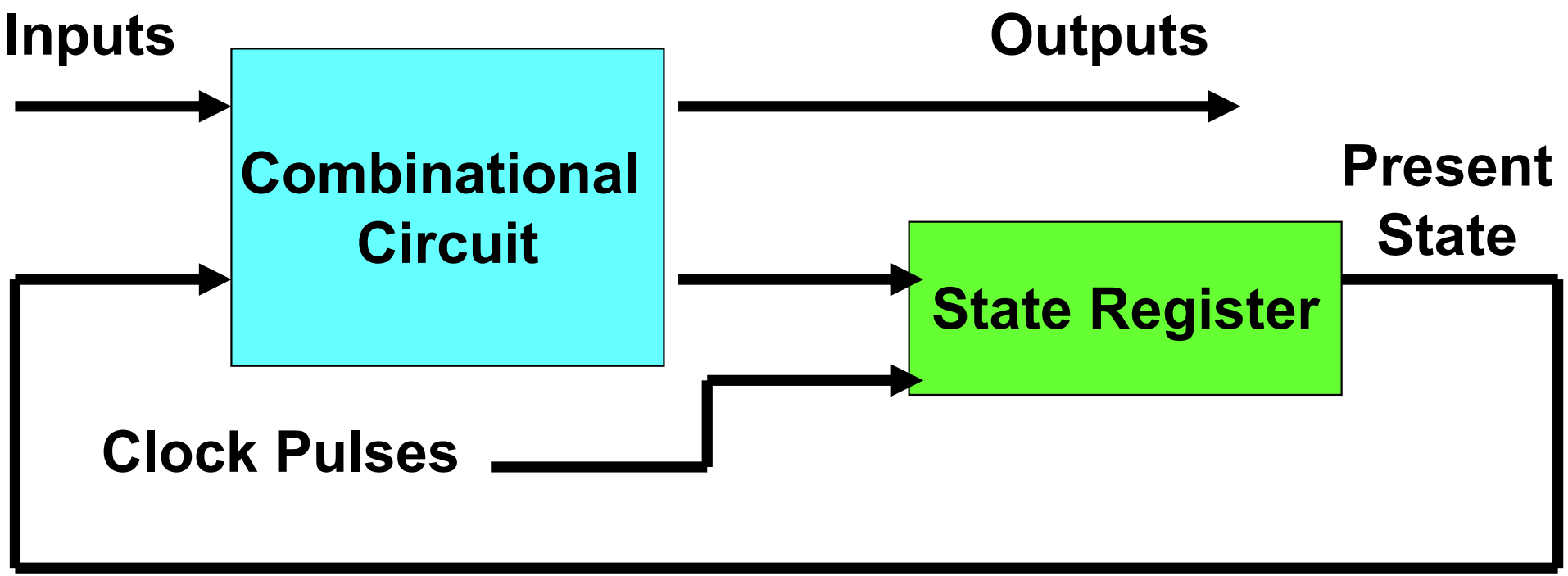

Timing Diagram of Clock Pulses

Gate Delays and Time Diagrams

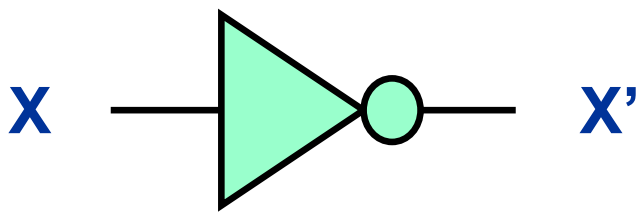

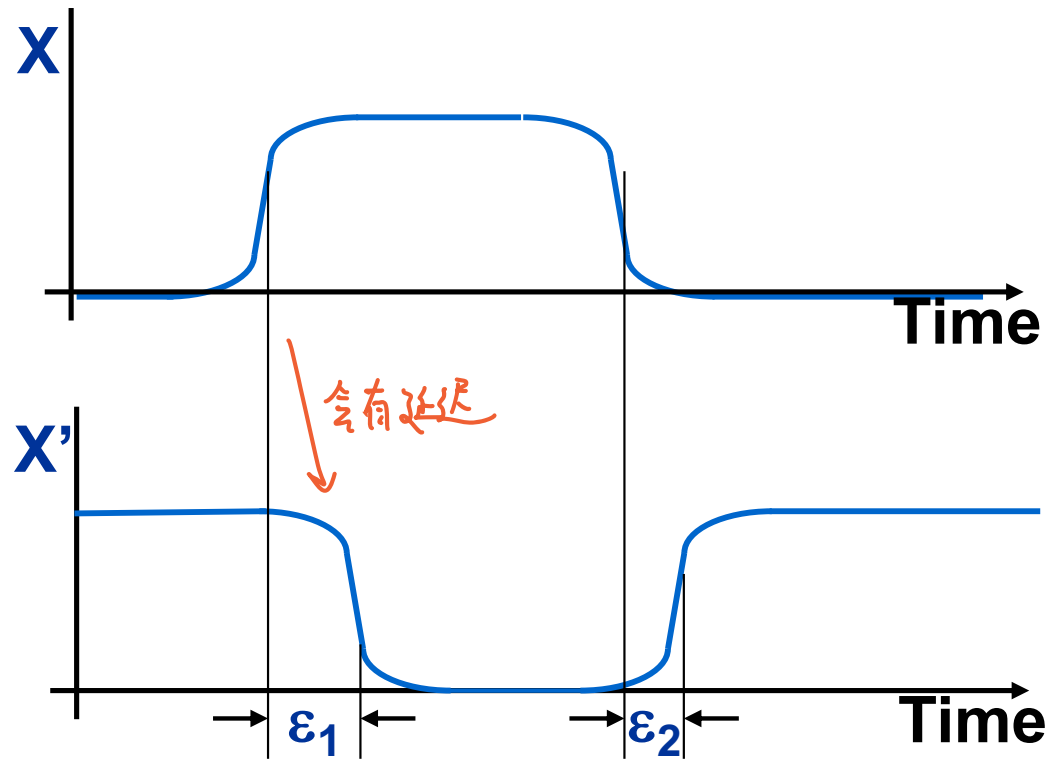

ε_1 may be different from ε_2, **why?**

Q. What does **Propagation Delay** depend on?

Oscillating Circuit: Not Stable

一直变

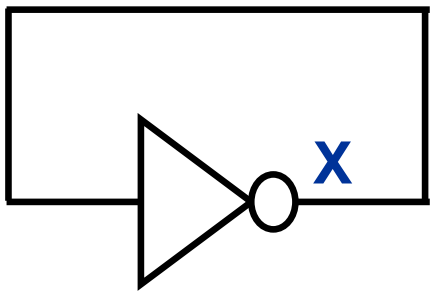

What does "**propagation delay**" depend on?

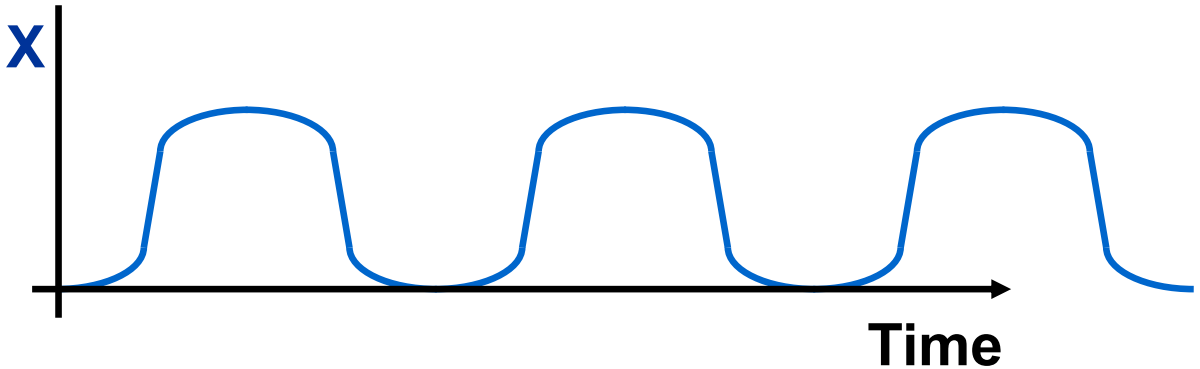

Circuit ***never*** reaches stability!!

Feedback Loop

Simplest bistable feedback circuit.

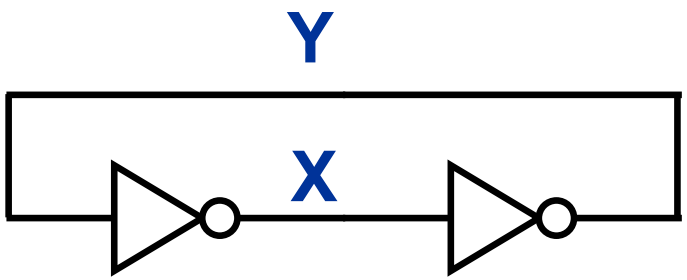

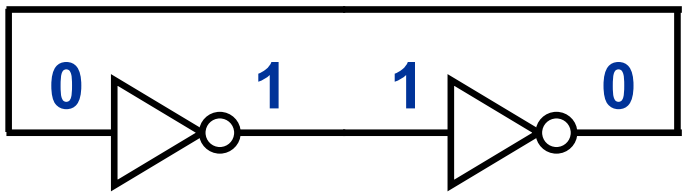

无变化

stable.

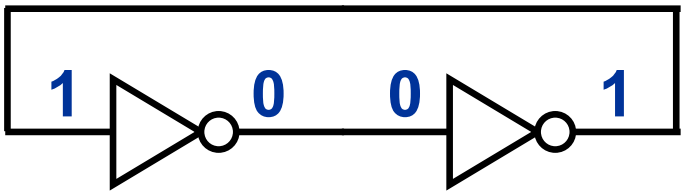

Overview: Sequential Logic Design Principles

* Introduction
* Bistable Elements
* Latches & Flip-Flops
* Analysis Procedure
* Design Procedure

Chapter 7 – “Digital Design: Principles and Practices” book

Bistable Elements (1/2)

双 稳态的

- **Bistable Element**: the simplest sequential circuit.
  - Consists of *2 inverters* and has *no inputs* and *2 outputs*.
  - Its *state* is characterised by the *values of its 2 outputs*.
  - It has only *2 states*: *(1,0)* or *(0,1)*.
  - Its *output* depends only on its *previous input*, through a feedback loop.

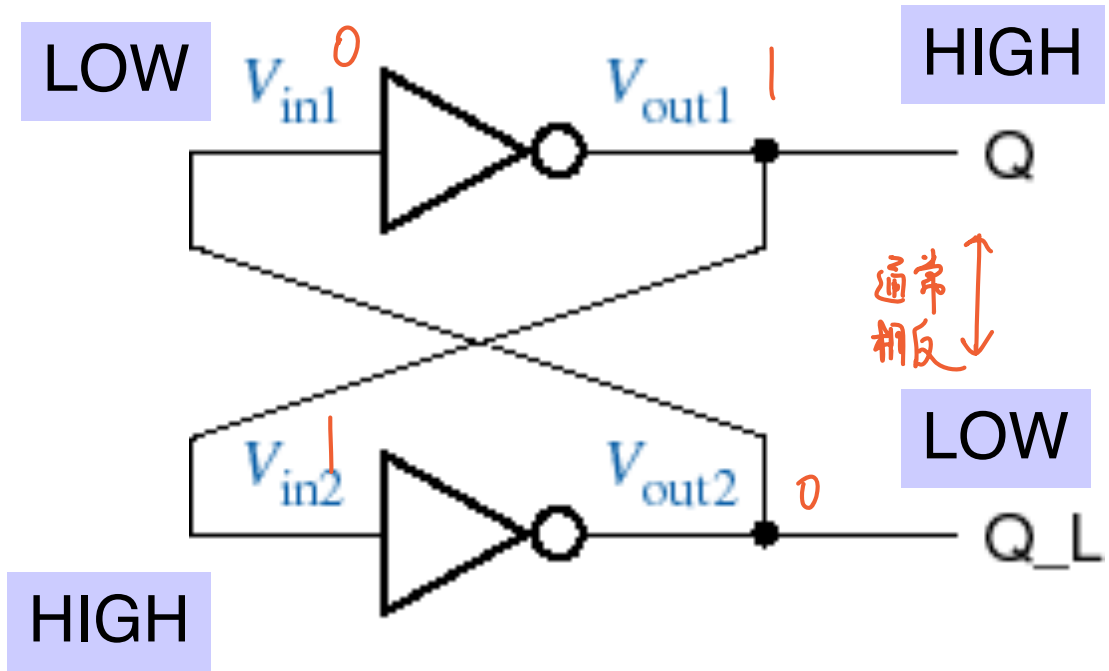

Bistable Elements (2/2)

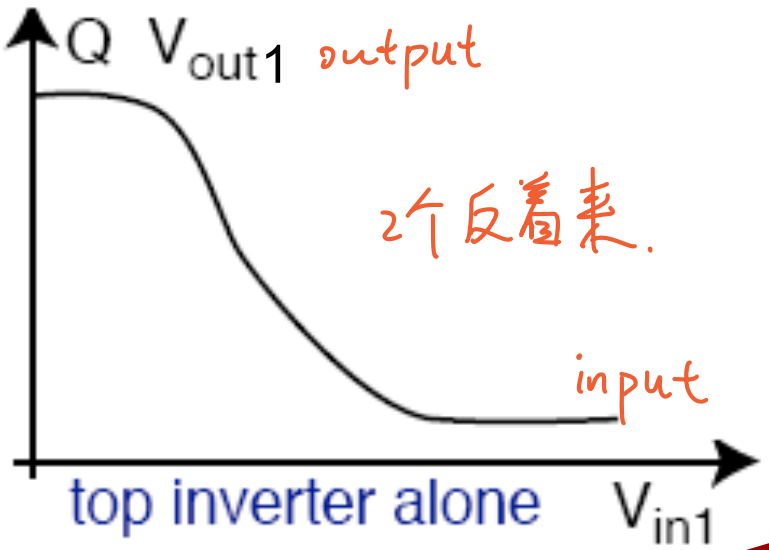

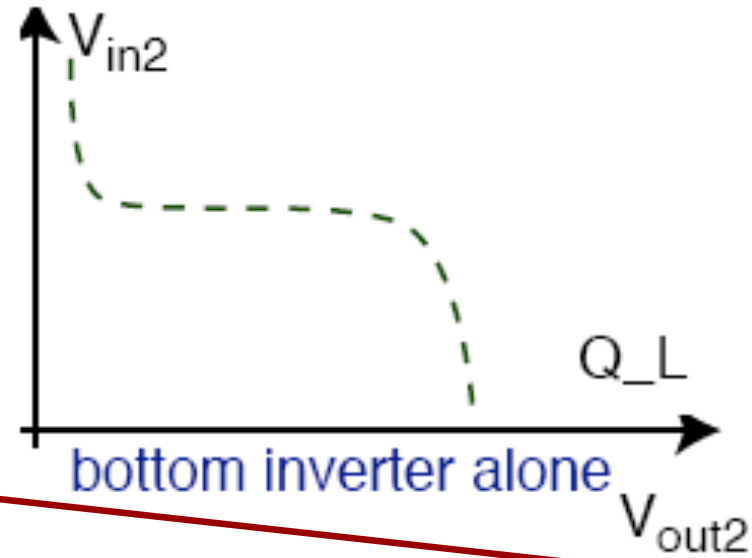

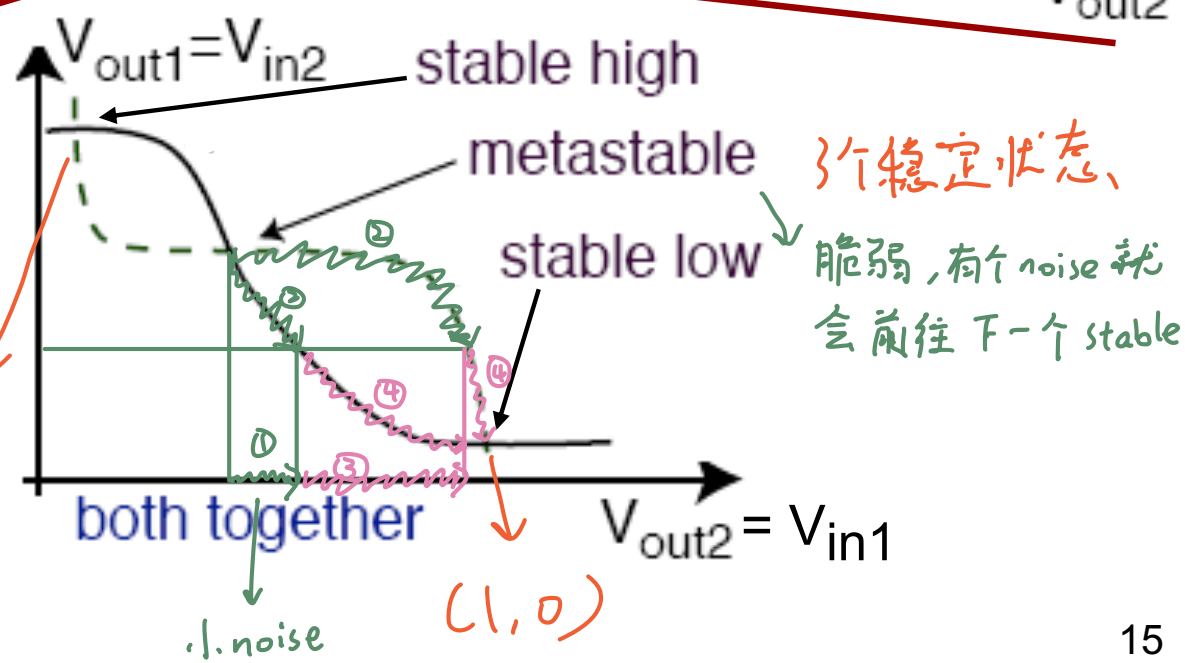

LLO到1
中间那段不是线性的

Metastability & Stable States

- ***There are not 2 states***, ***there are 3***!
  - **Metastable** occurs at the point where both inputs are halfway between ***0*** and ***1***.
  - Not a valid state!
  - Could stay in ***metastable*** forever if it wasn't for noise.

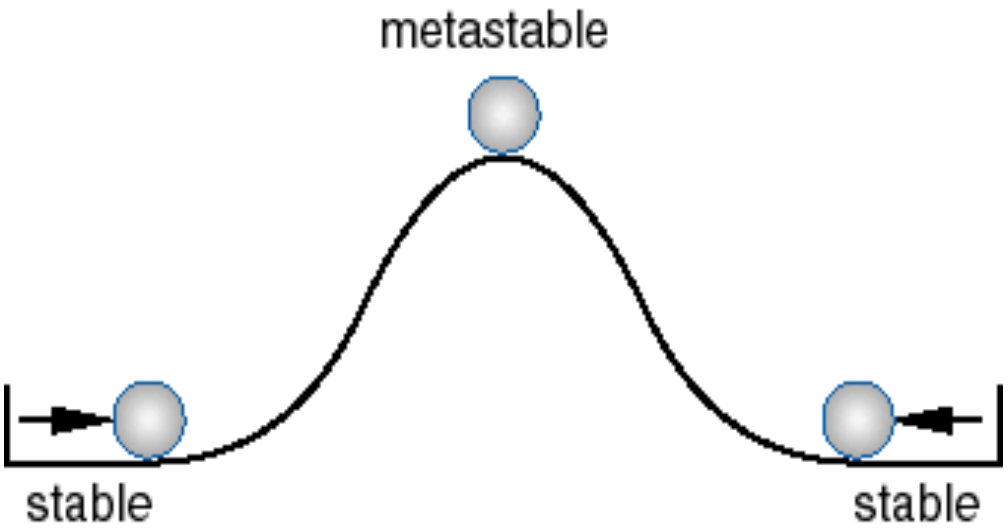

Metastability: Why is it important?

- **Metastability**:
  - All real systems are subject to it.
    - Problems are caused by "***asynchronous inputs***" that do not meet **flip-flop setup** and **hold times**.
  - Metastability is severe in high-speed systems since clock periods are so short, and "***metastability resolution time***" can be longer than one clock period.
  - Many digital designers, products, and companies have been "burned" by this phenomenon.

talk later

Overview: Sequential Logic Design Principles

* Introduction
* Bistable Elements
* Latches & Flip-Flops 2种电路
* Analysis Procedure
* Design Procedure

Chapter 7 – "Digital Design: Principles and Practices" book

Latches

更basic

- **Latch**: Basic storage element from which all ***flip-flops*** are constructed.

Basic

- ***Latches*** by themselves are not practical for use in synchronous sequential systems:
  - Simple ***SR Latches*** and ***D Latches*** do not have control methods to synchronise storage of data elements and therefore cannot be used in synchronous systems.

Set Reset (SR) Latch

- **SR Latch**:
  - ***Undefined state*** occurs when both *Set* and *Reset* inputs are ***True*** (this is "Problematic Design").
  - Two types: *NOR Gate* and *NAND Gate*.
    - Basically operate in the same way, but use different logic levels to define **truth**.
  - 74 series logic chips: **74LS279**
  - However, ***not very practical*** for clocked synchronous circuits!

SR Latch with NOR Gates

SR Latch: (1) *S* sets or presets *Q* to *1*; (2) *R* resets or clears the *Q* output to *0*.

(Reset)

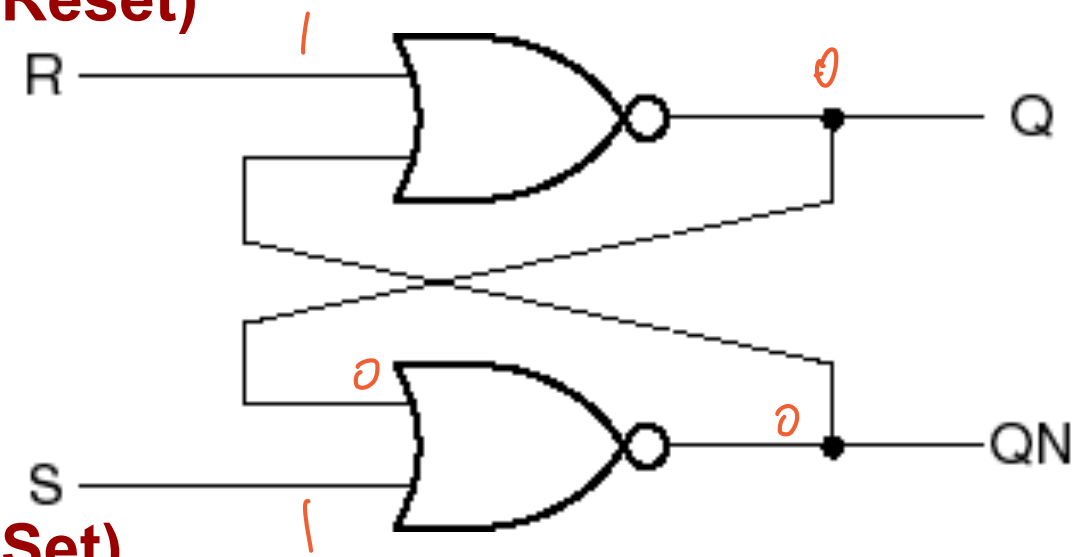

(Set)

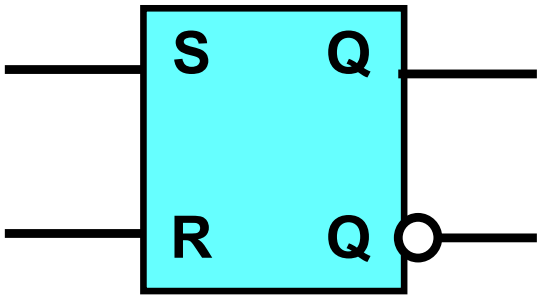

记忆

Inputs		***Outputs***	
S	R	Q	QN
0	0	last Q	last QN
0	1	0	1
1	0	1	0
1	1	0	0

Undefined operation when both inputs are ***True***.

SR Latch Operation (1/2)

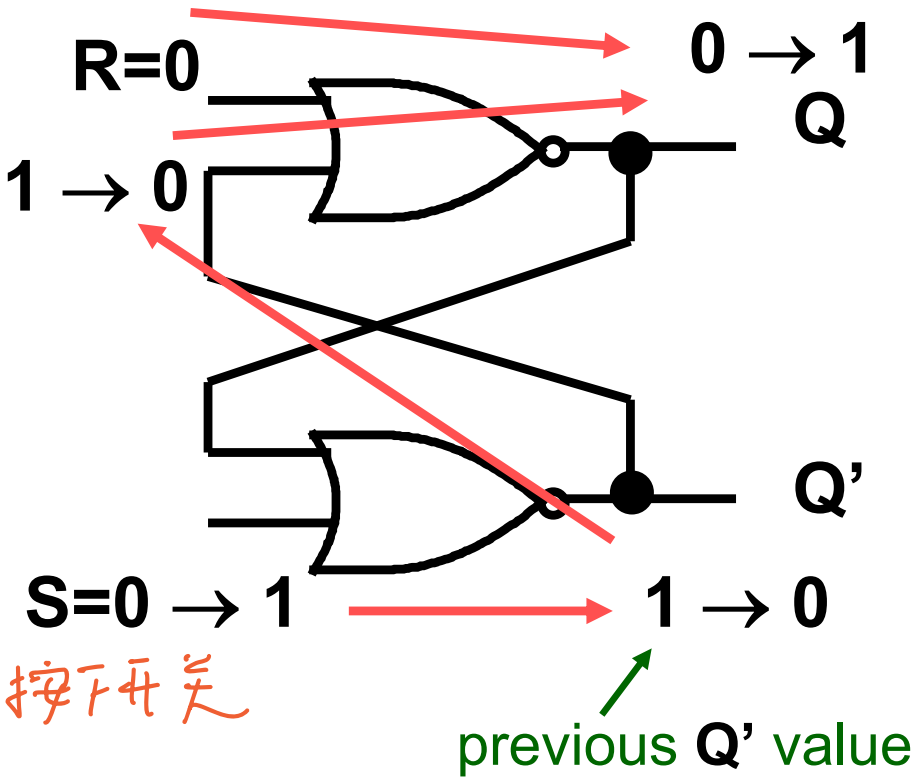

***SET* operation**
(changing *S* to *1*)
Initially Q = 0; Q' = 1

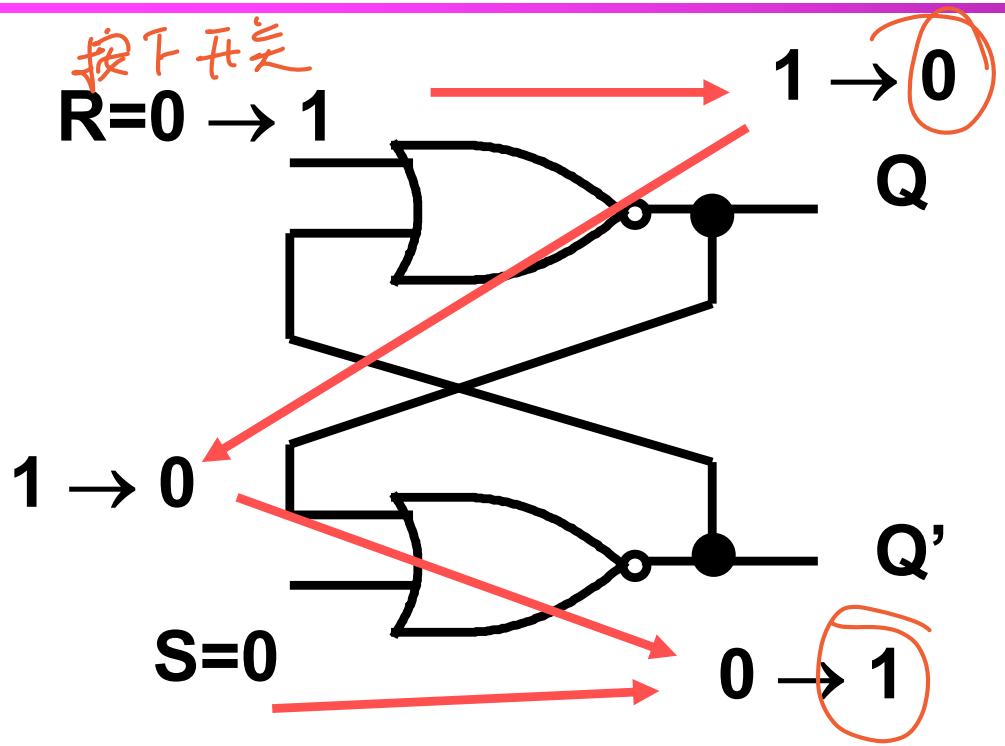

***RESET* operation**
(changing *R* to *1*)
Initially Q = 1; Q' = 0

SR Latch Operation (2/2)

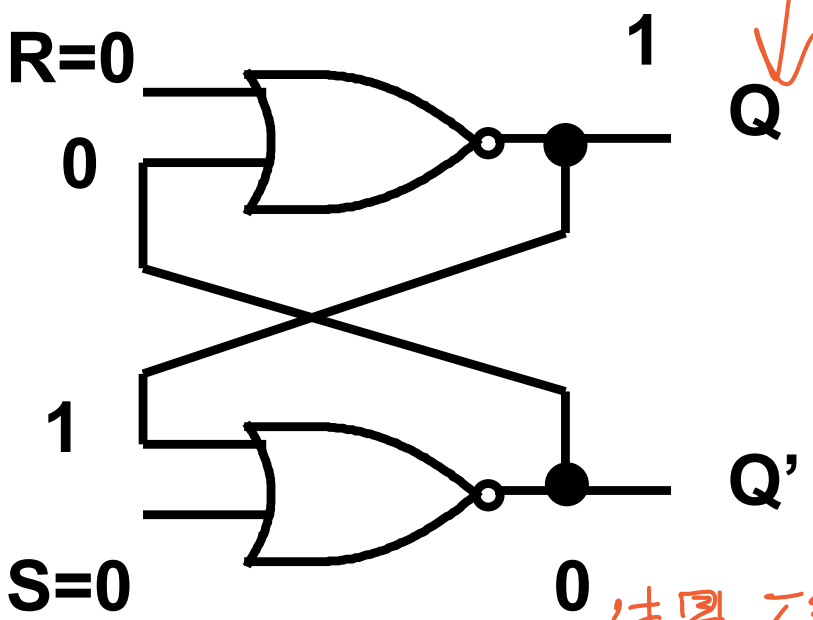

松开开关 1→0

结果不变

Stable when:

S = R = 0, Q = 1

松开开关

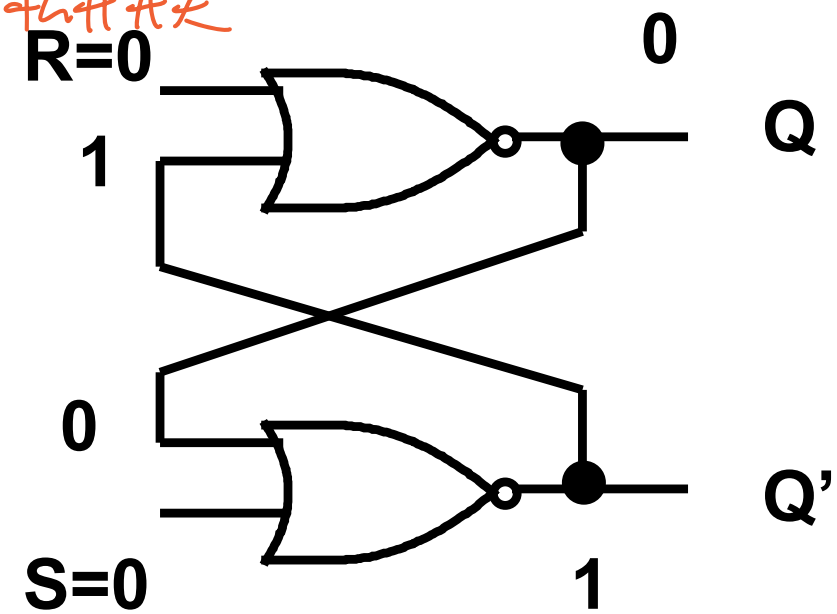

Stable when:

结果不变

S = R = 0, Q' = 1

What about S = R = 1?

- What happens when both **Set** and **Reset** are ***True***?
  - Assume that <u>both</u> *S* and *R* transition to *1* simultaneously.
  - Then, *Q* becomes '0', but *Q'* remains '0'! So **outputs are no longer complements of each other**.

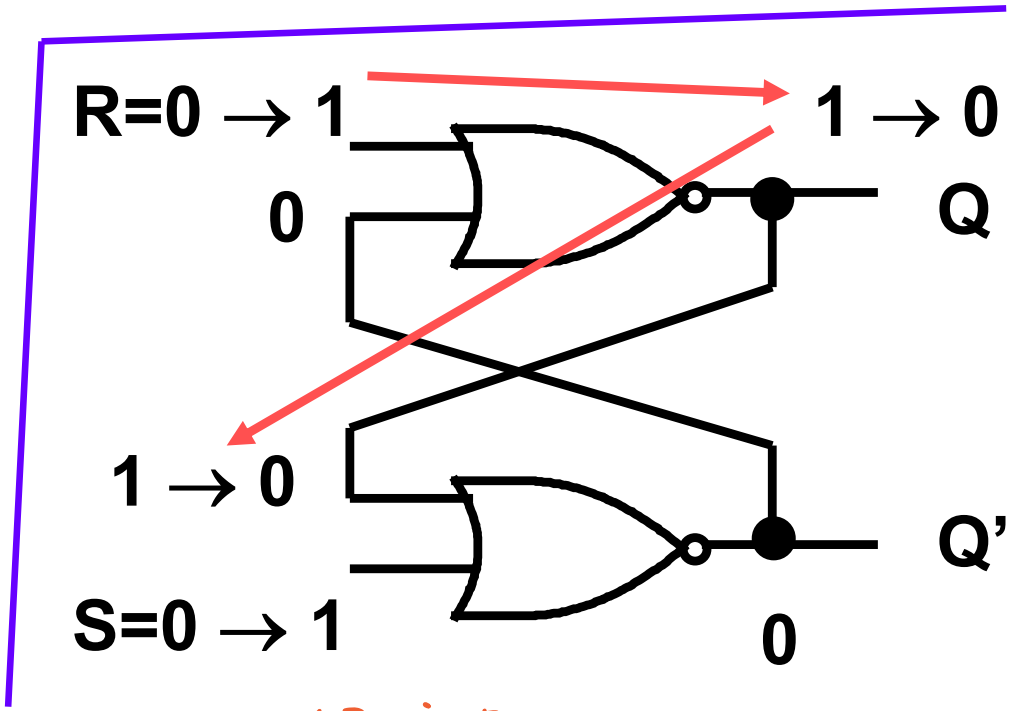

一直按着是这样

What happens when *S* and *R* return to *0*?

- **Oscillation** occurs if <u>both</u> ***S*** and ***R*** return to ***0*** simultaneously! But at some point, in practical circuit, the system will settle into a stable condition due to the propagation delay.
- The bottom line is that ***S = R = 1*** is an illegal input condition (or the SR latch should be designed, such that one input is ***dominant***).

This **can be avoided** by using "**recovery time**" concept.

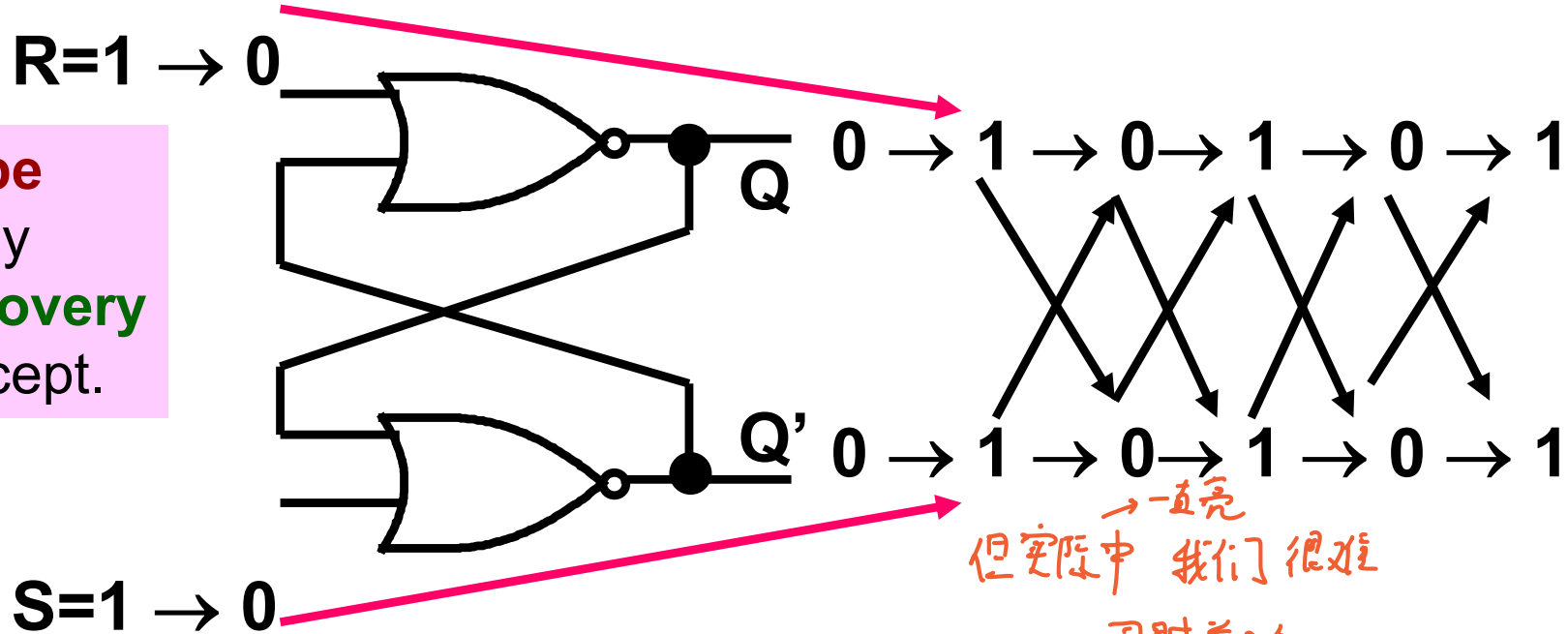

→一直亮

但实际中 我们很难

同时关2个

而且不同的线也有延时

松手后 开始来回变

SR Latch (Built with NAND Gates)

set reset

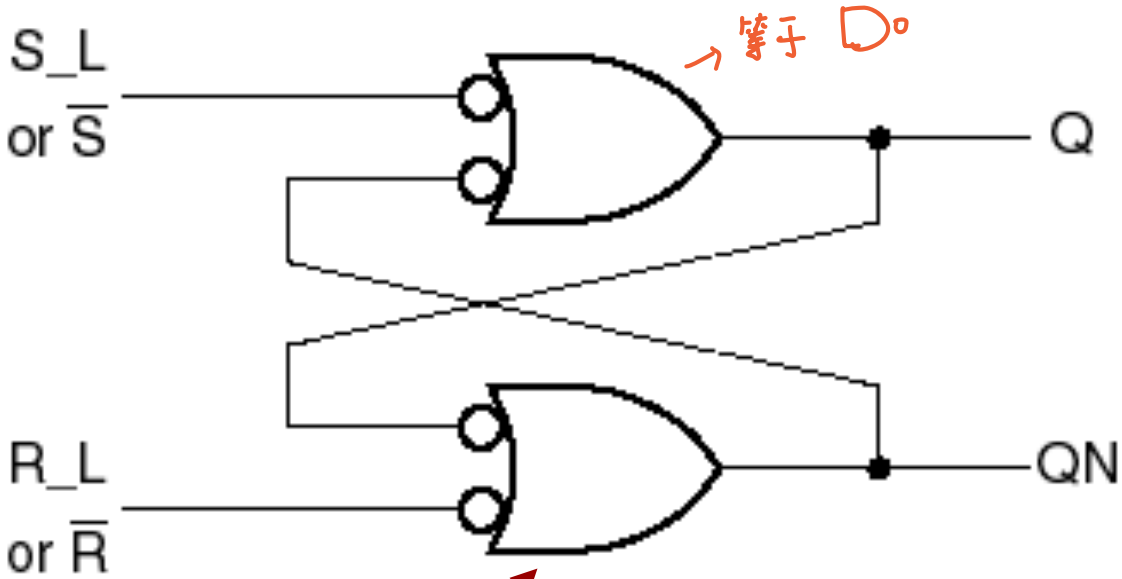

active low circuit.

Same function as a **NAND** gate

$\overline{S}\overline{R}$ Latch

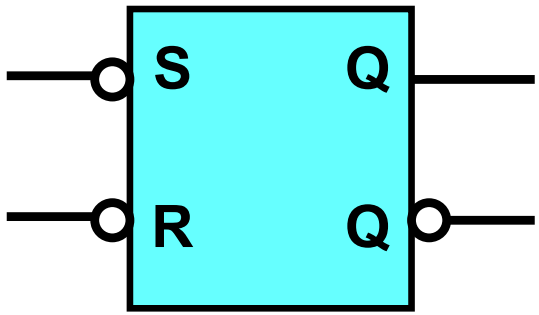

Inputs		*Outputs*	
S_L	R_L	Q	QN
0	0	1	1
0	1	1	0
1	0	0	1
1	1	last Q	last QN

Undefined operation when both inputs are **True**.

有时不想记忆 ↘ 加个控制

SR Latch with Control Input (1/2)

- What happens if either ***Set*** or ***Reset*** are changed in an SR Latch?
  - Must come up with ***control method*** (Enable) to control when SR Latch can be changed.
  - Leaving ***Control Line*** at logic '0' prevents latch from being written with new value.
  - But still have a problem with indeterminate outputs!

SR latch with control input: **only sensitive to S, R** inputs when control line is asserted.

SR Latch with Control Input (2/2)

$\bar{S}\bar{R}$ latch

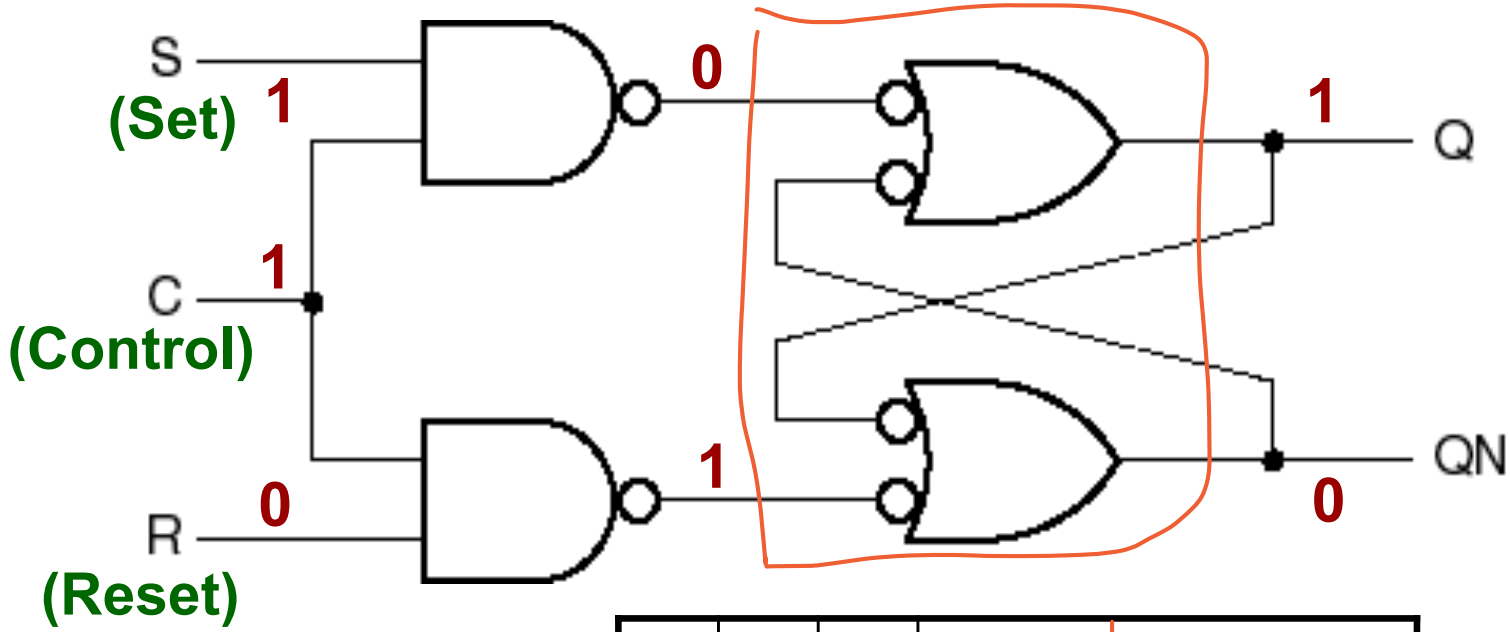

SR Latch
with Enable

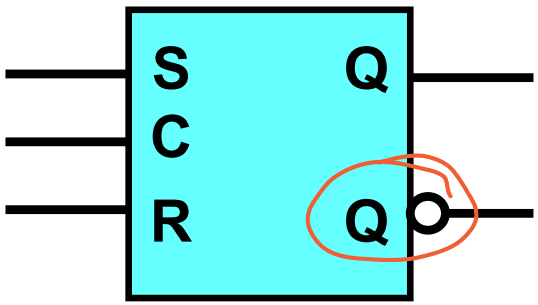

改成QN也行

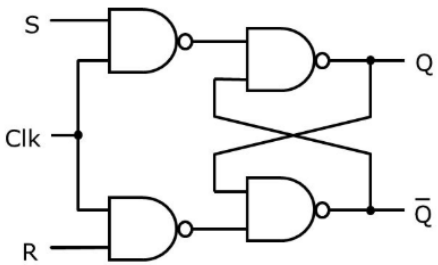

S	R	C	Q	Q*
0	0	1	last Q	last Q*
0	1	1	0	1
1	0	1	1	0
1	1	1	1	1
x	x	0	last Q	last Q*

都是1 1

D Latch (1/2)

使上面的 S. R 互补

- So far, **we can say**:
  - Don't ever want to design a system where the next state is indeterminate.
  - Can eliminate the ***indeterminate state*** by ensuring that <u>both</u> ***Set*** and ***Reset*** inputs are never equal to '**1**' at the same time!
- **D Latch**:
  - Has only *two inputs*: **Data** (D) and **Control** (C).
  - *D* input to *Set* input and the complement of *D* input to the *Reset* input <u>always</u>.
  - No longer have an indeterminate state.

D latch with only NAND

not →

→

Queen Mary University of London

D Latch (2/2)

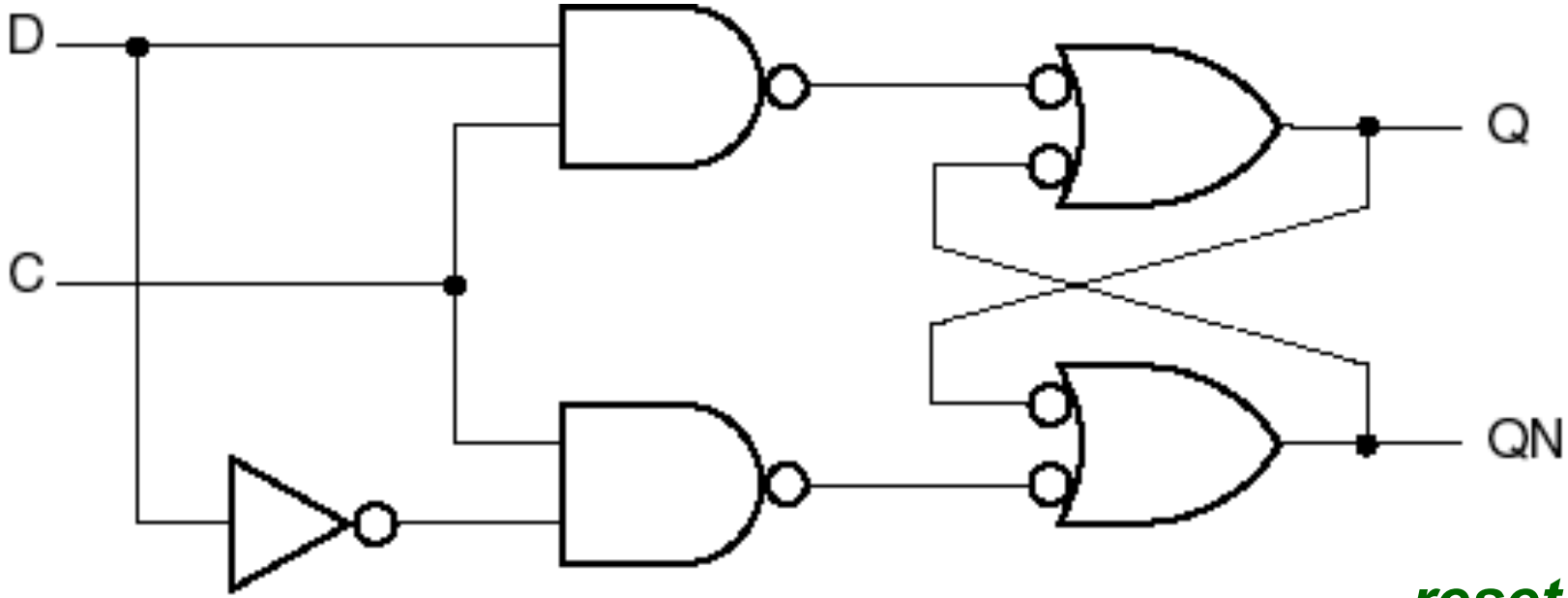

D Latch

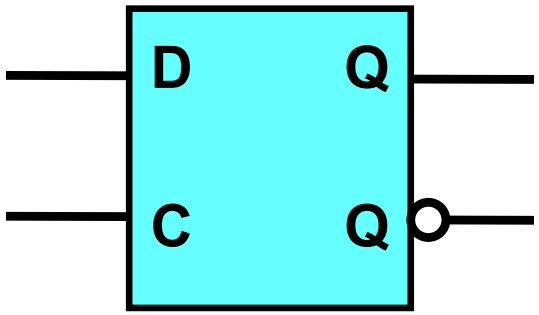

C	D	Q	QN
1	0	0	1
1	1	1	0
0	x	last Q	last QN

***reset* state**

***set* state**

control

remember

可以store 1bit 信息.

D-Latch Operation

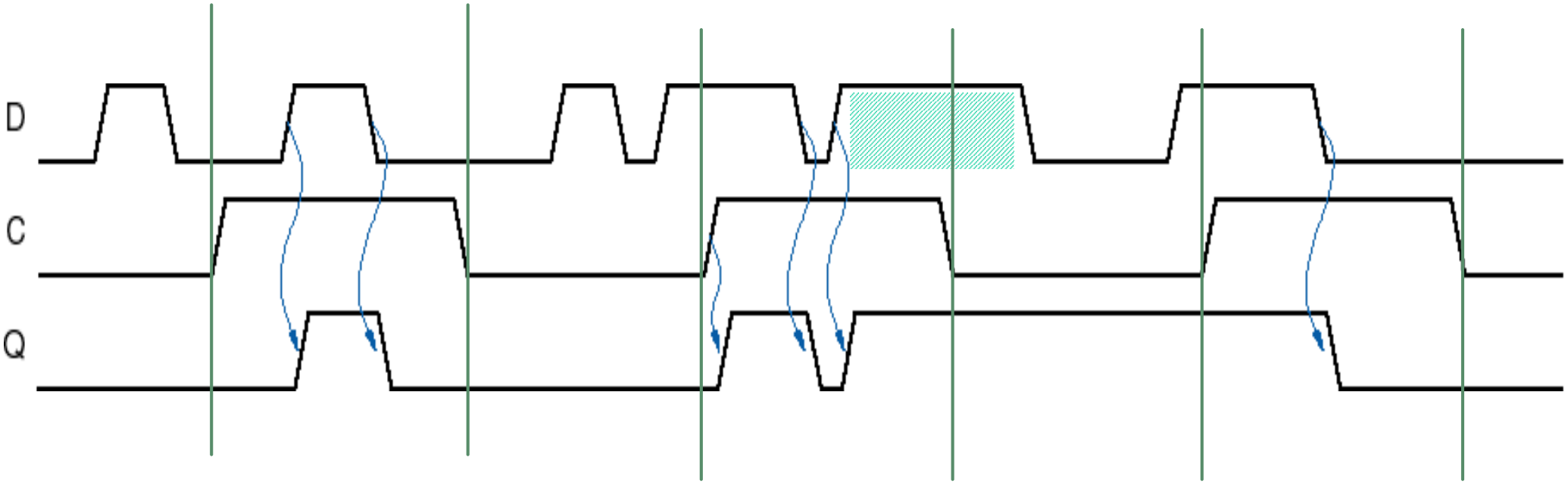

There's a *time window around the falling edge* of **C** when **D** must not change.

Task 1

- Draw the outputs of an SR latch for the input waveforms shown below. *Assume* that the propagation delay of a NOR gate is 10ns.

Q* = S + R'Q

S	R	Q	QN
0	0	last Q	last QN
0	1	0	1
1	0	1	0
1	1	0	0

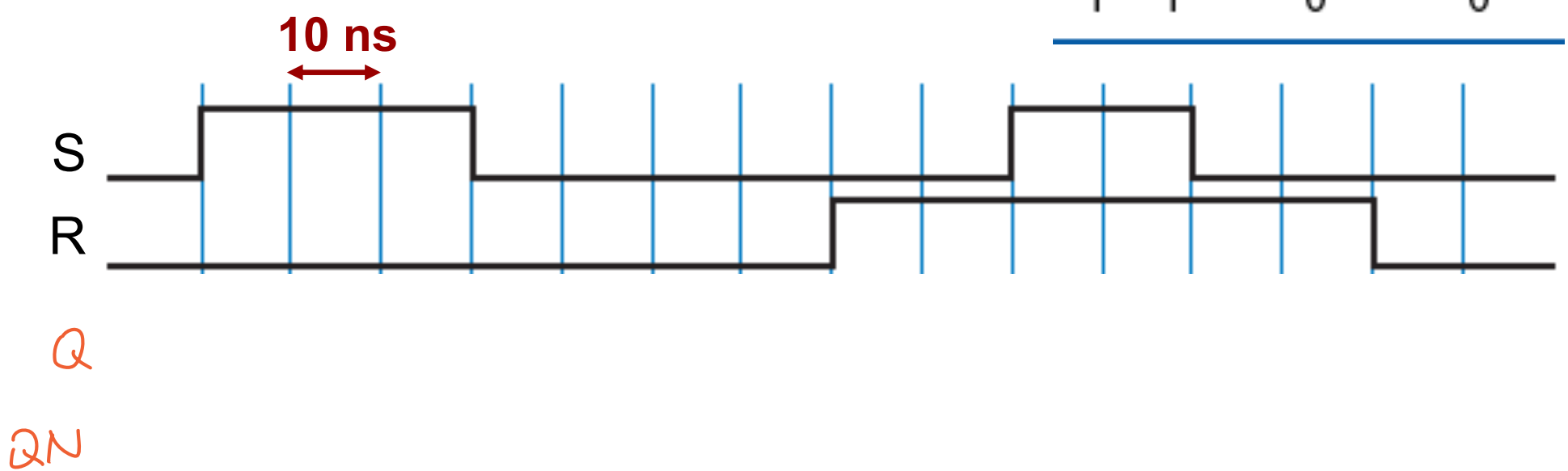

To be completed in class …

5 minutes

Overview: Sequential Logic Design Principles

* Introduction
* Bistable Elements
* Latches & Flip-Flops
* Analysis Procedure
* Design Procedure

Chapter 7 – "Digital Design: Principles and Practices" book

Flip-Flops

- **Level sensitive latches** are inadequate, because:
  - Output continually changes if input changes.
  - **Race conditions** can occur.
- Need a better approach to storing data!
  - We will consider both **D and JK-type flip-flops**.
- You can check the following URL for animated simulation of the various flip-flop types:

http://tams-www.informatik.uni-hamburg.de/applets/hades/webdemos/16-flipflops/10-srff/chapter.html

Master-Slave Flip-Flops

- **How Master-Slave Flip-Flops work**:
  - Employ two latches.
  - Isolate output from input:
    - *Output* cannot change continuously with *input*.
    - Input must have a *stable setup time*.

level-triggered
latches
SR
$\bar{S}\bar{R}$
D

edge-triggered
flip-flop
有个例外：master-slave

Master-Slave D Flip-Flop

- Very **popular design tool** (usually present in PLDs).
- Used extensively in designing ***registers***.
- Uses ***2 D Latches***:
  - *Master D Latch* to latch input.
  - *Slave D Latch* to latch output.
- Latches never operate together.
- Uses ***narrow pulse clocking*** approach.
- Eliminates racing conditions.

D Type Master-Slave Flip-Flop (1/5)

negative-edge-triggered DFF

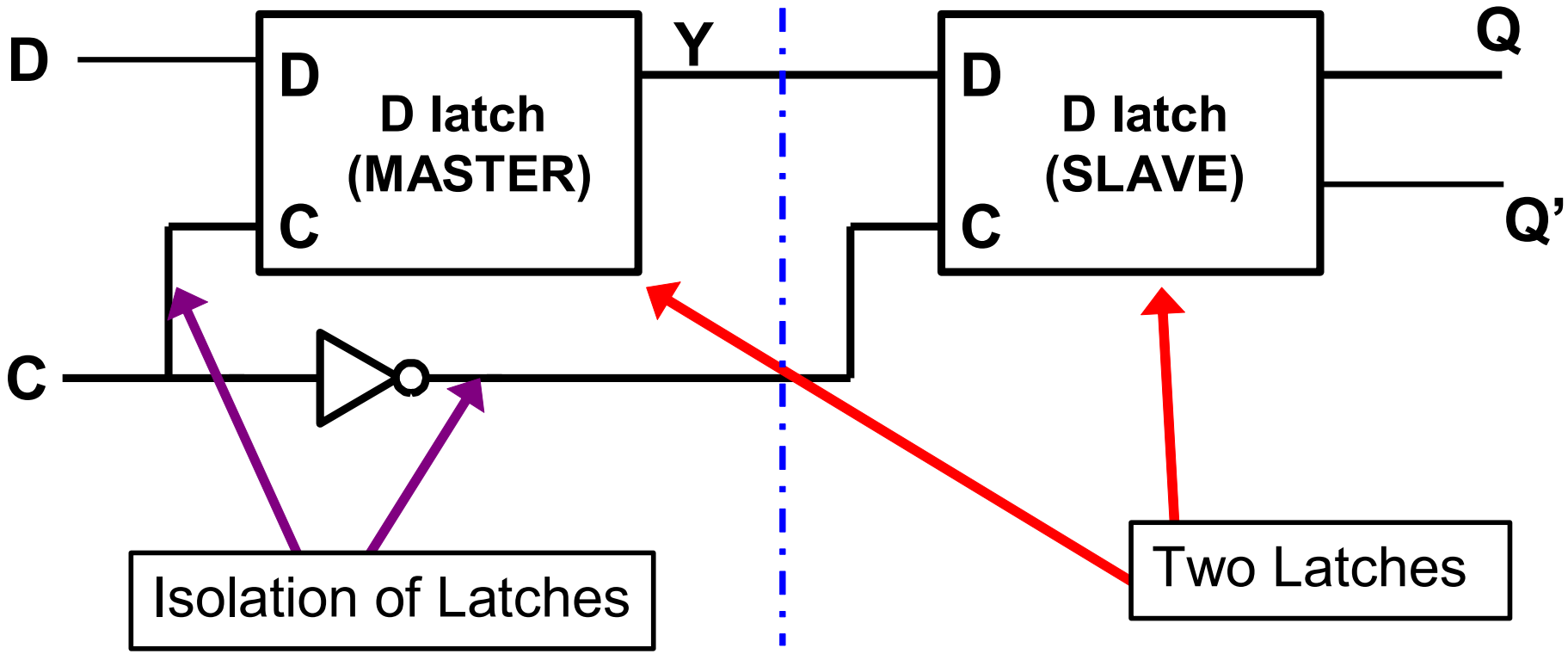

D Type Master-Slave Flip-Flop (2/5)

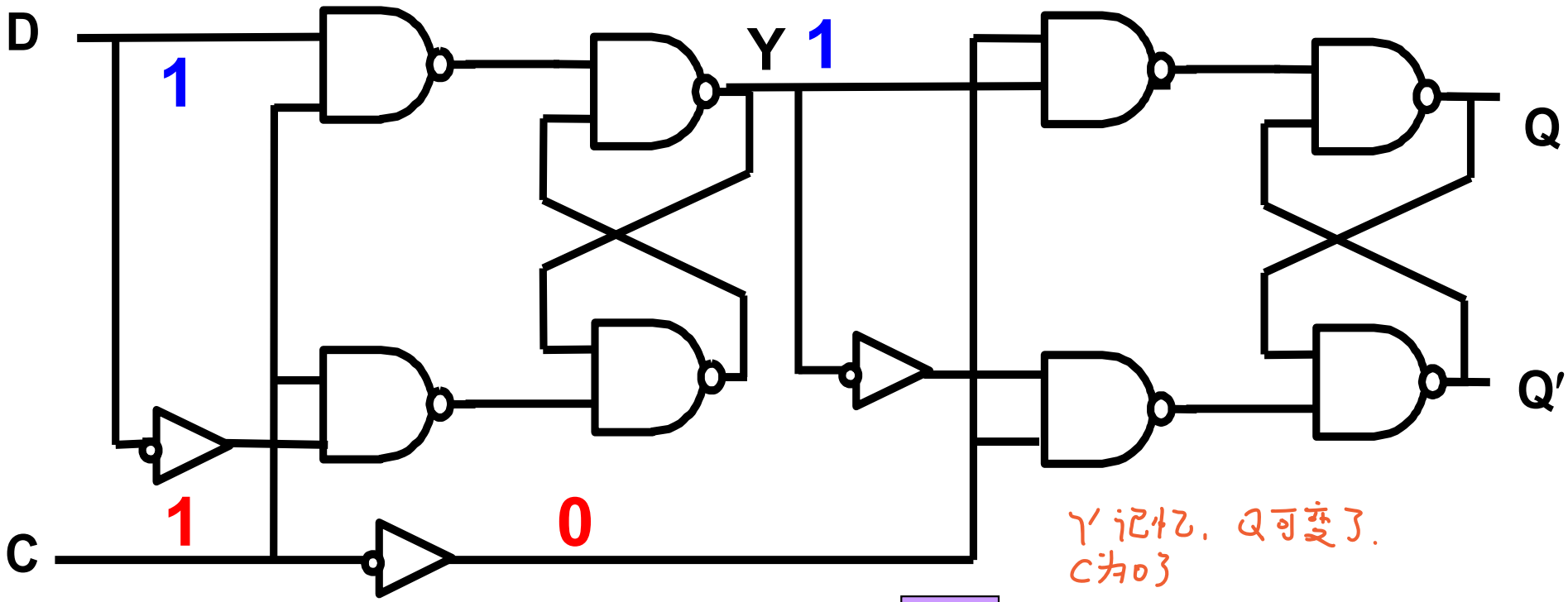

Y′记忆，Q可变了，
C为0了

C是1：D可传到后面

C是0：会关上，D进不去

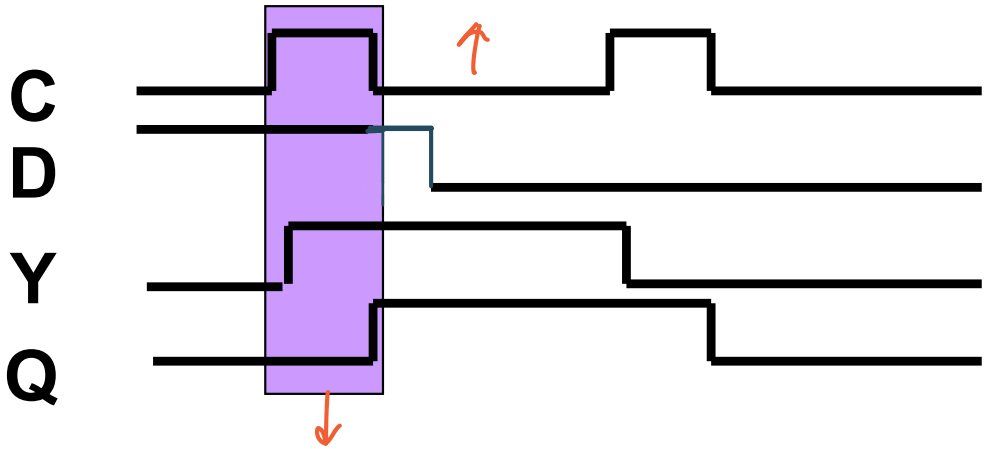

此时 C为1，Y能到，Q到不了

D Type Master-Slave Flip-Flop (3/5)

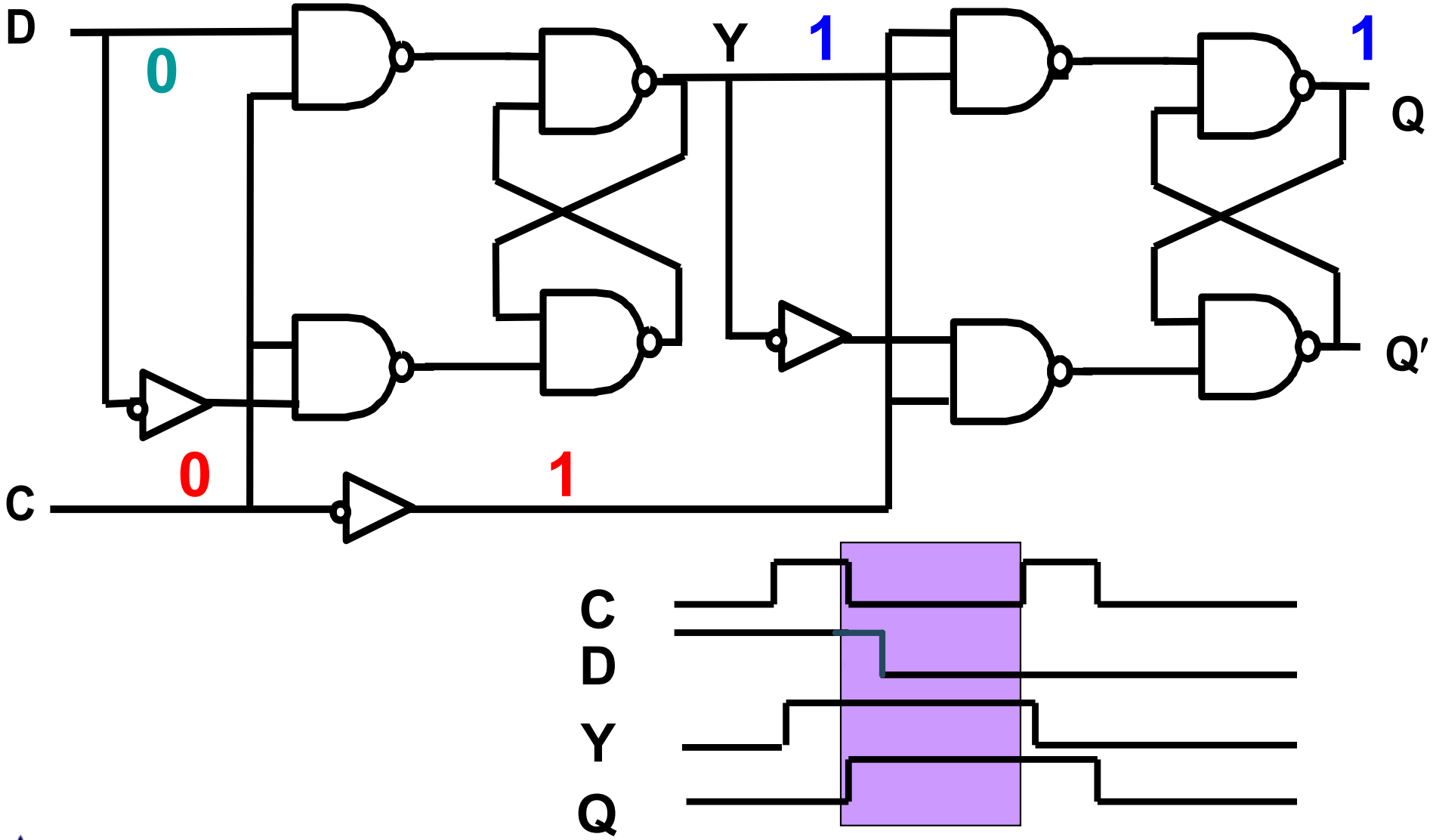

D Type Master-Slave Flip-Flop (4/5)

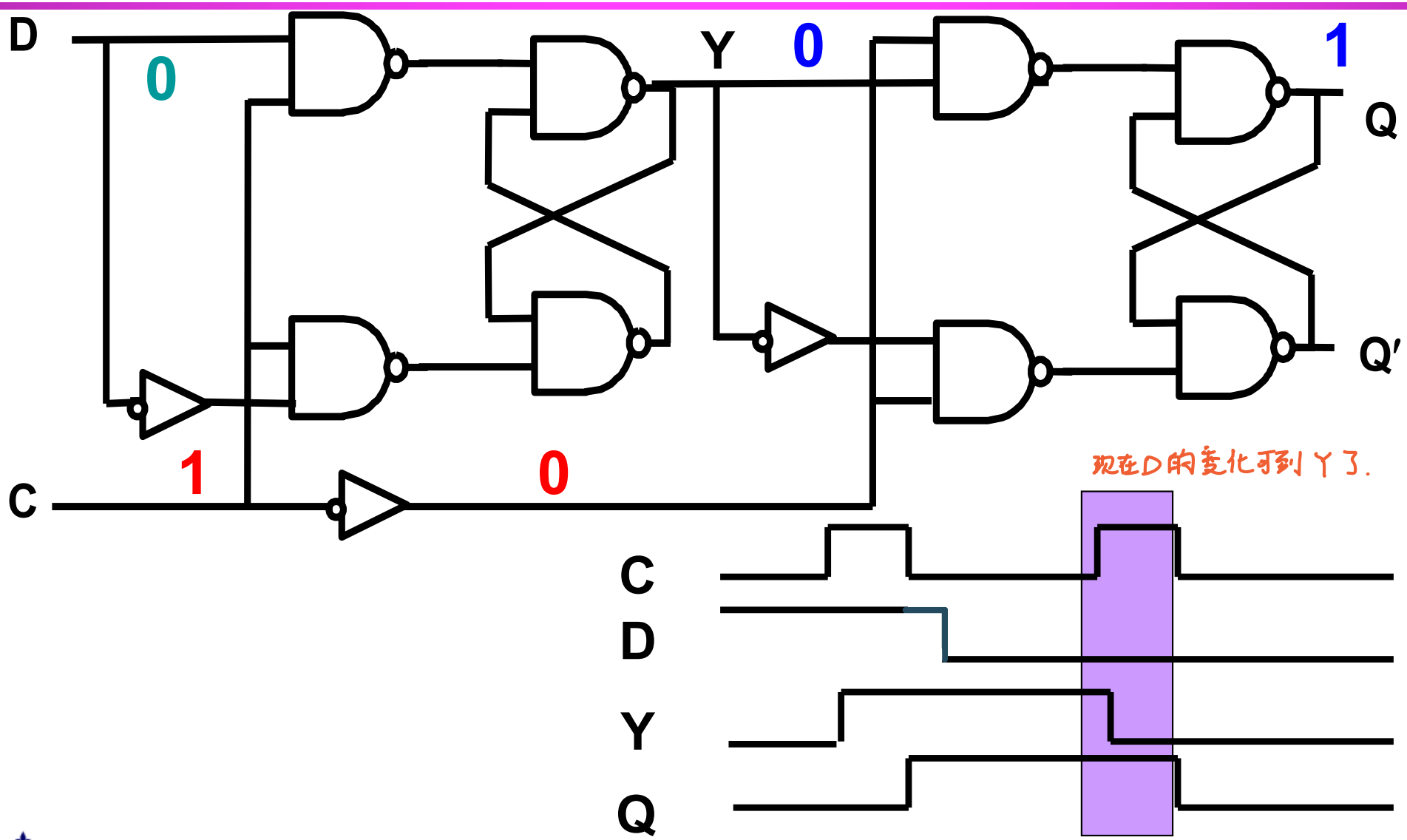

D Type Master-Slave Flip-Flop (5/5)

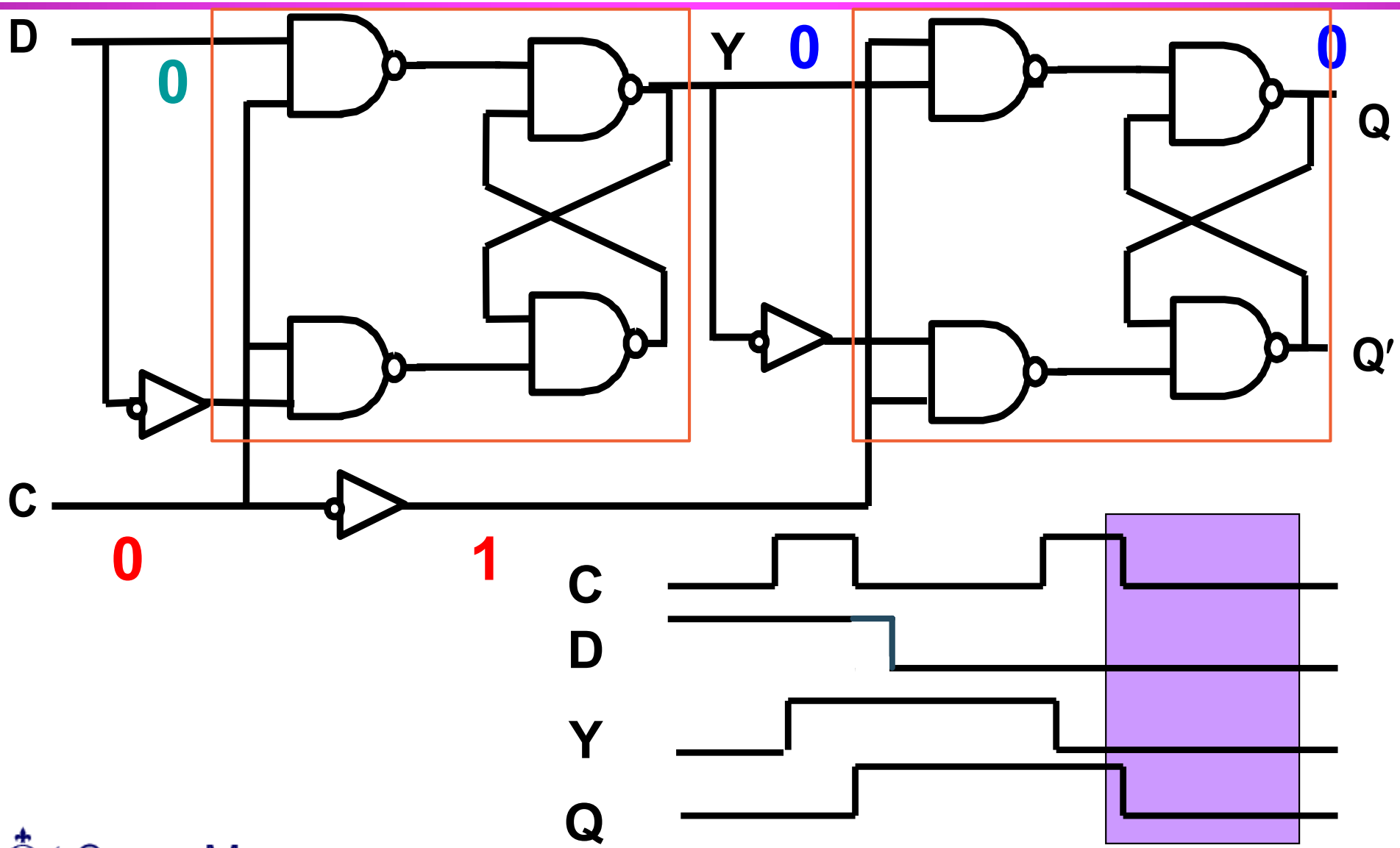

JK Flip-Flops

postponed output

这个件不太有用

- **JK Flip-Flop**:
  - Uses 2 SR latches with control inputs.
    - The SR latch still has undesirable indeterminate next state (when ***S*** and ***R*** are both ***1***).
  - Adds *AND* gates to *S* and *R* inputs with feedback from the SR slave latch output.
    - Now when ***S*** and ***R*** inputs are ***1***, the output of the flip-flop merely complements.
  - Uses ***narrow pulse clocking*** approach.

Master-slave JK flip-flop

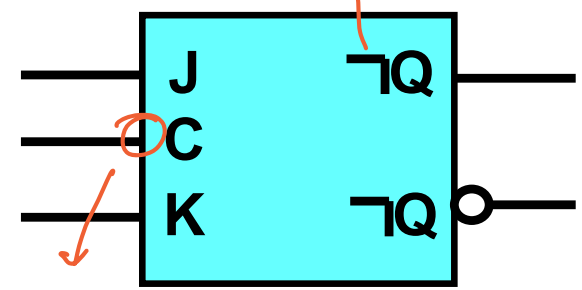

无三角 → master-slave

▷ → edge triggered

Minimum pulse width for inputs, to avoid going into a metastable state.

JK Type Master-Slave Flip-Flop

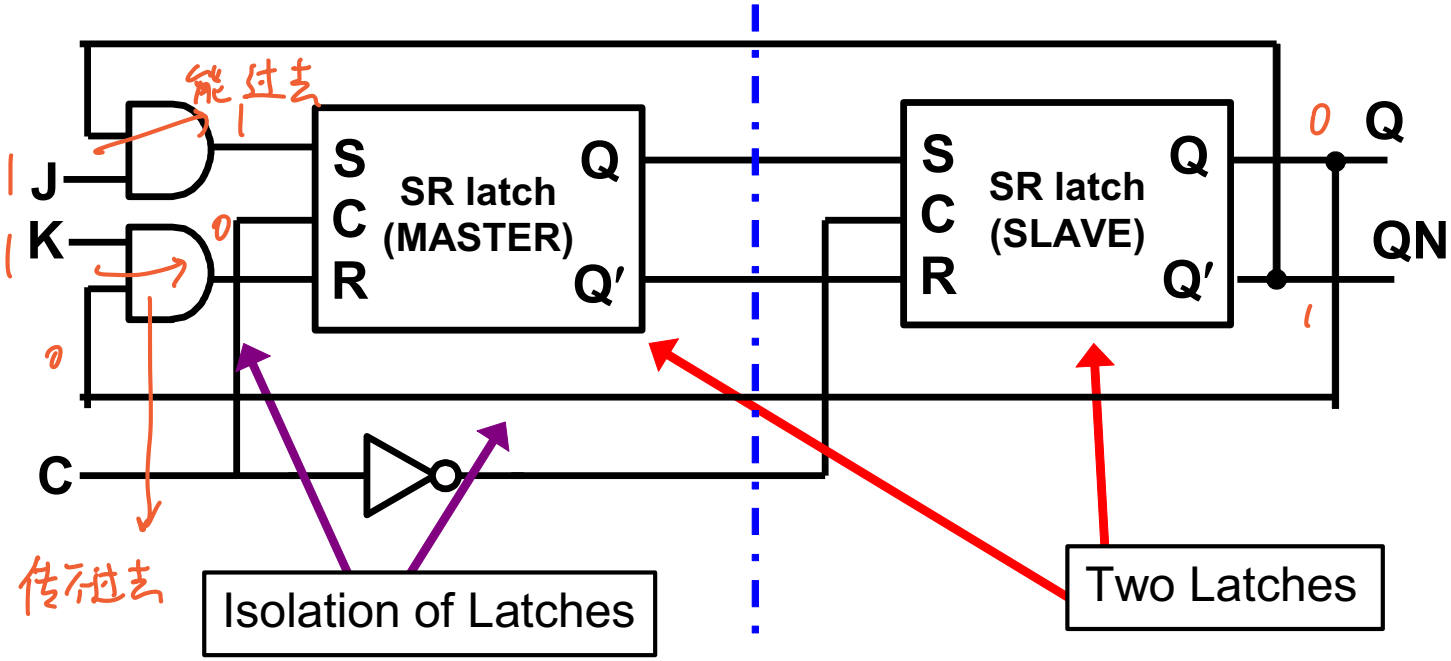

S	R	C	Q	QN
0	0	1	last Q	last QN
0	1	1	0	1
1	0	1	1	0
1	1	1	1	1
x	x	0	last Q	last QN

其它的 能过去

0 → 0 0

1 → 1 1

1 → 1 1

0 → 0 0

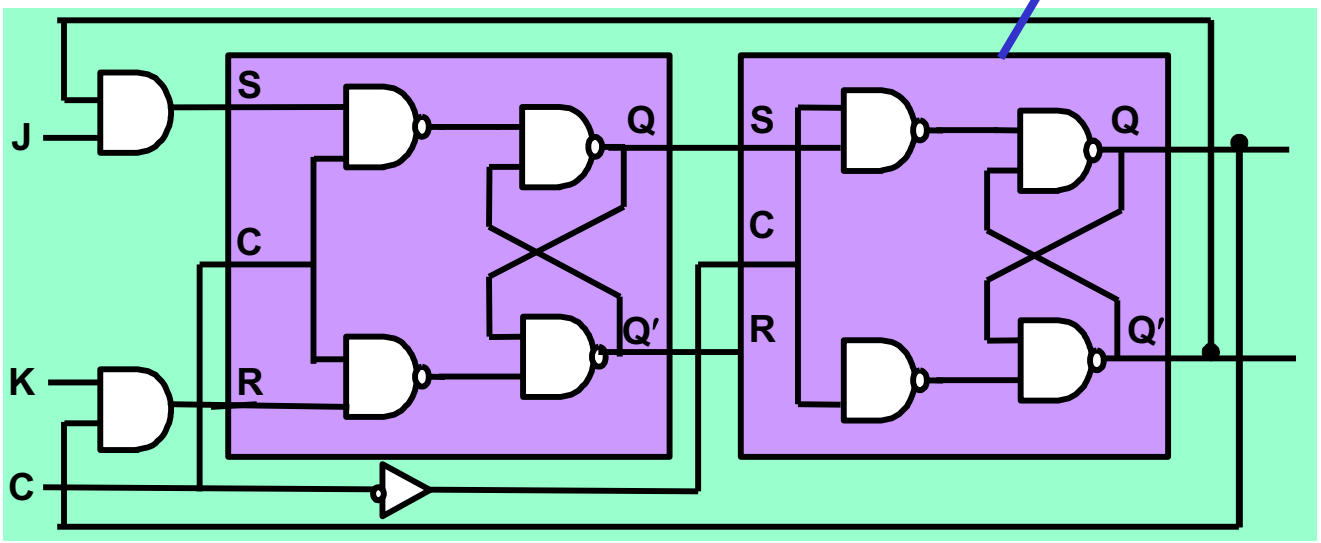

Queen Mary
University of London

Master-Slave JK Flip-Flop: *J=0*, *K=1* (1/2)

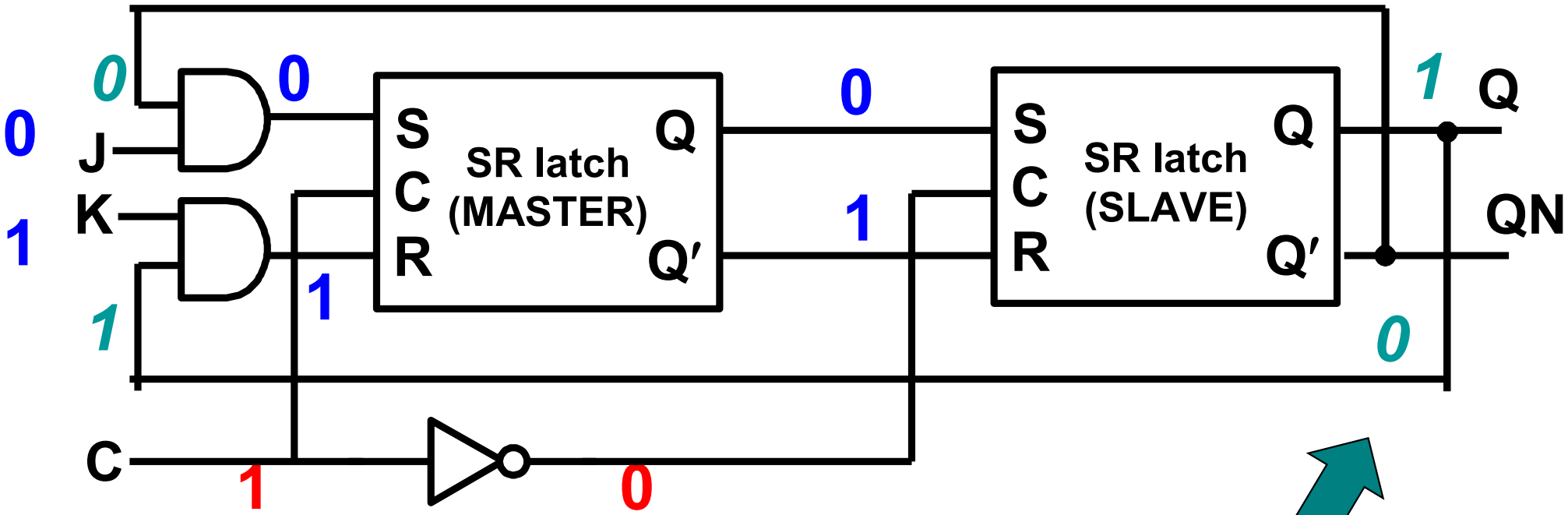

S	R	C	Q	QN
0	0	1	last Q	last QN
0	1	1	0	1
1	0	1	1	0
1	1	1	1	1
x	x	0	last Q	last QN

Last Q & QN

Master-Slave JK Flip-Flop: *J=0*, *K=1* (2/2)

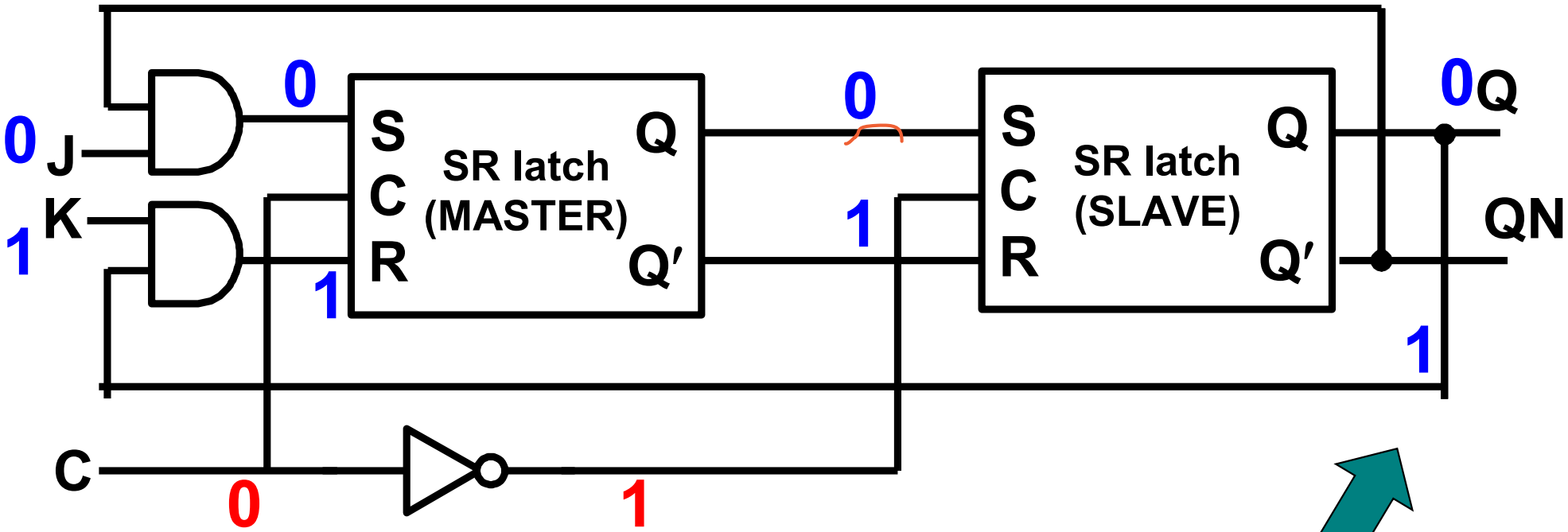

S	R	C	Q	QN
0	0	1	last Q	last QN
0	1	1	0	1
1	0	1	1	0
1	1	1	1	1
x	x	0	last Q	last QN

New Q & QN

Master-Slave JK Flip-Flop: *J=1*, *K=1* (1/2)

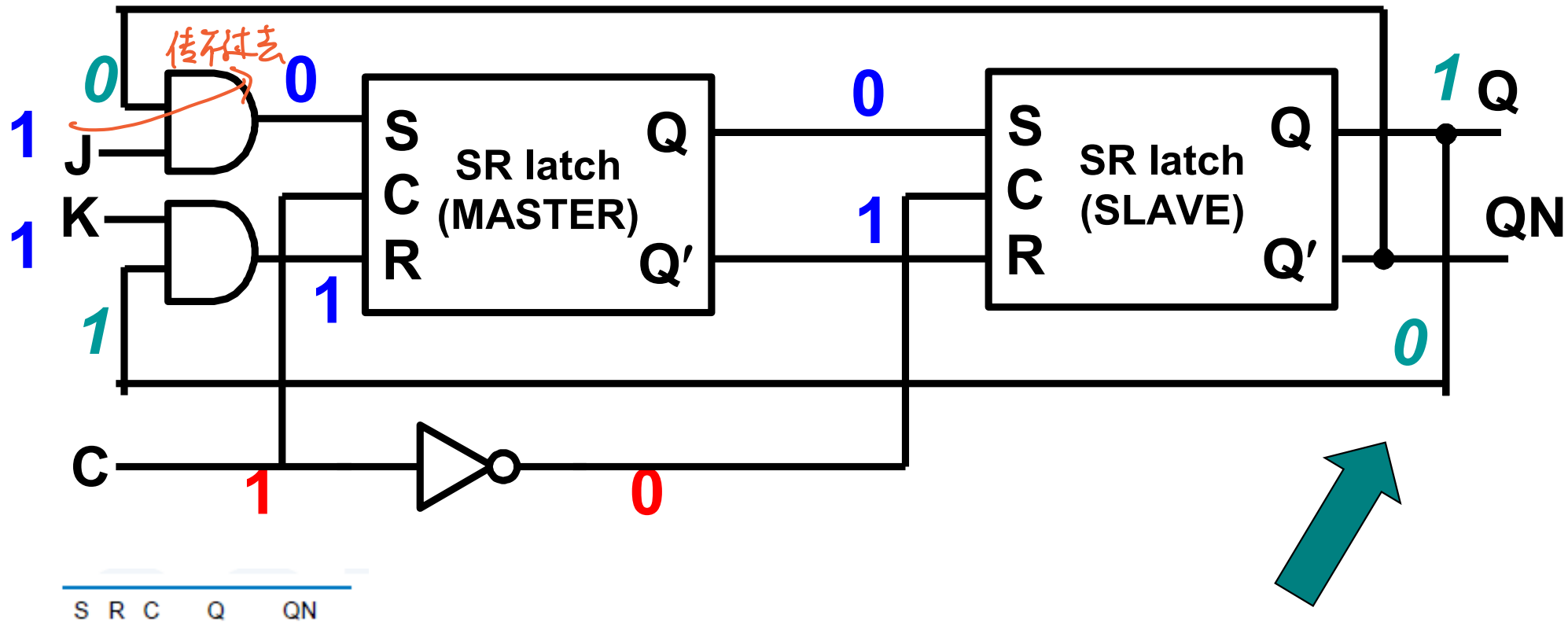

S	R	C	Q	QN
0	0	1	last Q	last QN
0	1	1	0	1
1	0	1	1	0
1	1	1	1	1
x	x	0	last Q	last QN

Last Q & QN

"Toggle"

Master-Slave JK Flip-Flop: *J=1*, *K=1* (2/2)

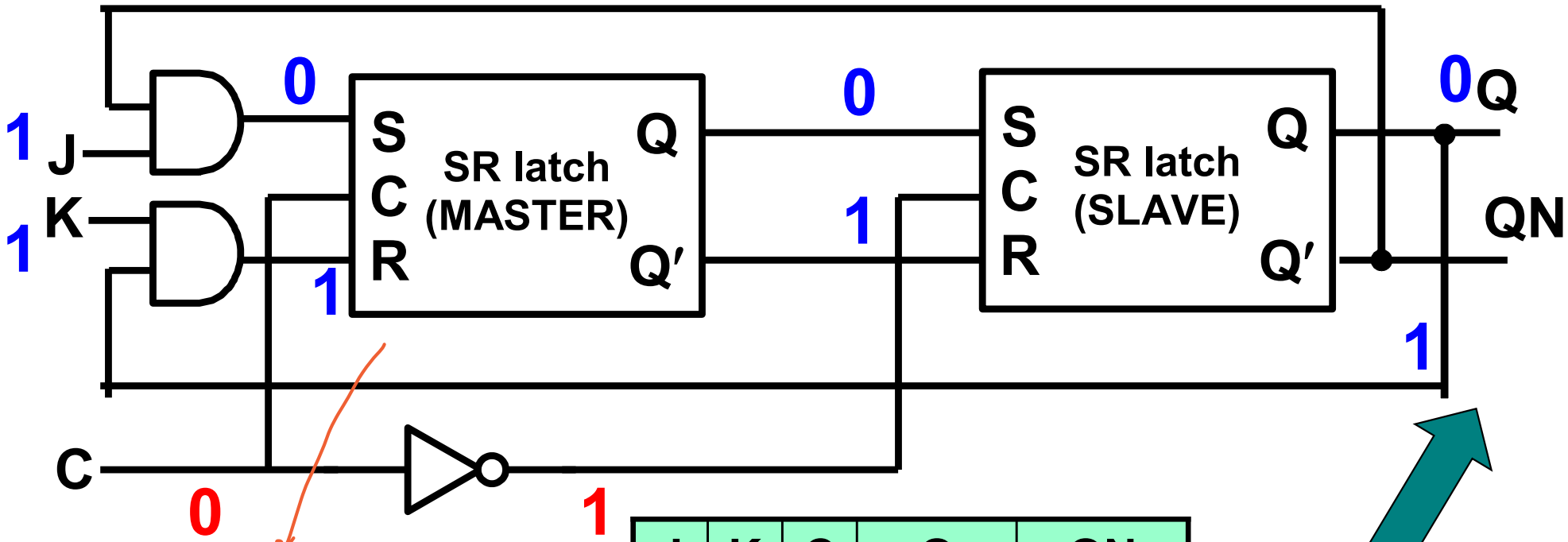

S	R	C	Q	QN
0	0	1	last Q	last QN
0	1	1	0	1
1	0	1	1	0
1	1	1	1	1
x	x	0	last Q	last QN

J	K	C	Q	QN
x	x	0	last Q	last QN
0	0	⎍	last Q	last QN
0	1	⎍	0	1
1	0	⎍	1	0
1	1	⎍	last QN	last Q

→ Toggle state

New Q & QN

Queen Mary University of London

Master-Slave JK Flip-Flop: Problems

- If inputs ***J*** and ***K*** are not held valid during the entire period when CLK is active for the master, the above flip-flop exhibits *1's* and *0's* **catching behaviour**.
  - ***1's Catching***: Output changes to *1* even though *K* and not *J* is asserted at the end of the triggering pulse.
  - ***0's Catching***: Output changes to *0* even though *J* and not *K* is asserted at the end of the triggering pulse.

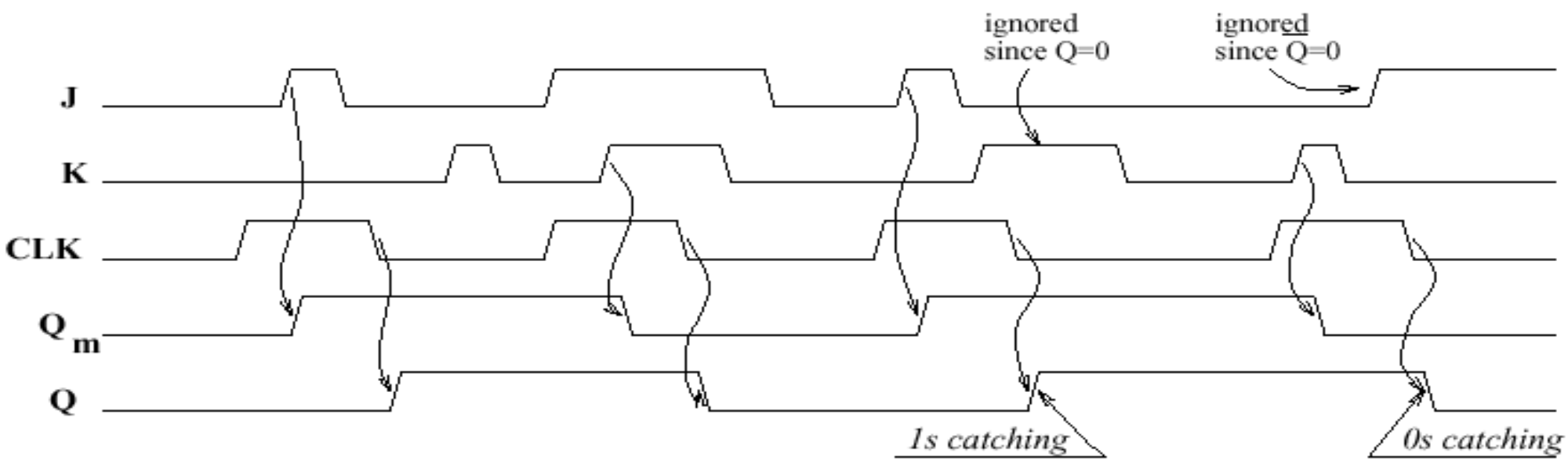

Edge-Triggered Flip-Flops

- ***Edge-triggered flip-flops***:
  - **Ignore inputs** while the clock pulse is at a constant level.
  - Only **set outputs** on clock pulse transitions.
    - *Negative* or *positive edges:*

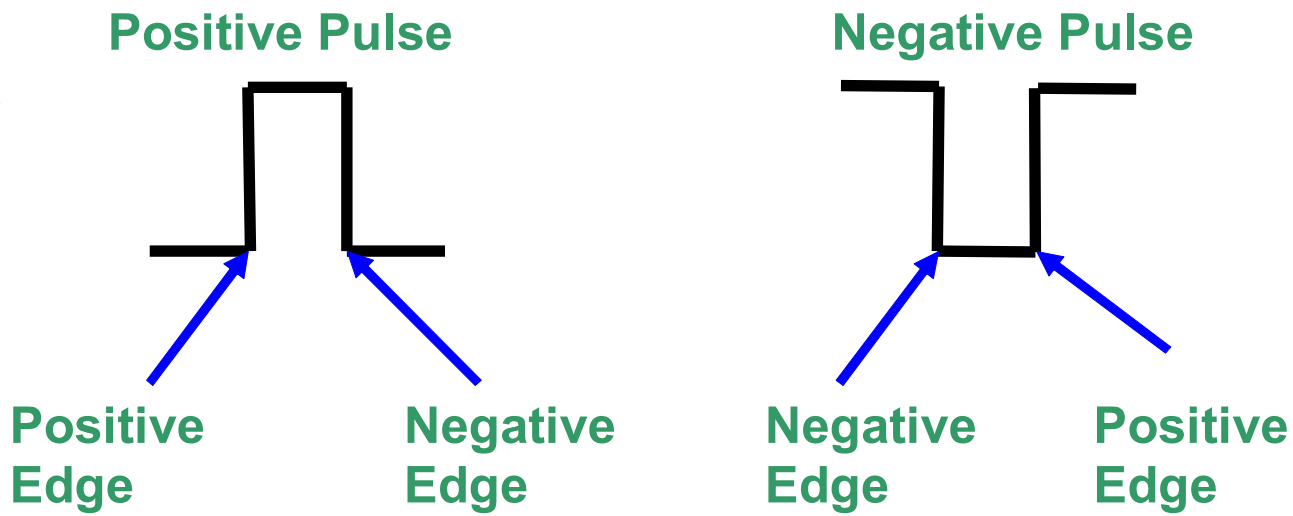

  - For **positive triggered flip-flops**, the value at the ***D*** input is transferred to ***Q*** on a positive transition.

只在clock变的edge变.

Positive Edge-Triggered D Flip-Flop

D	CLK	Q	QN
0	↑	0	1
1	↑	1	0
x	0	last Q	last QN
x	1	last Q	last QN

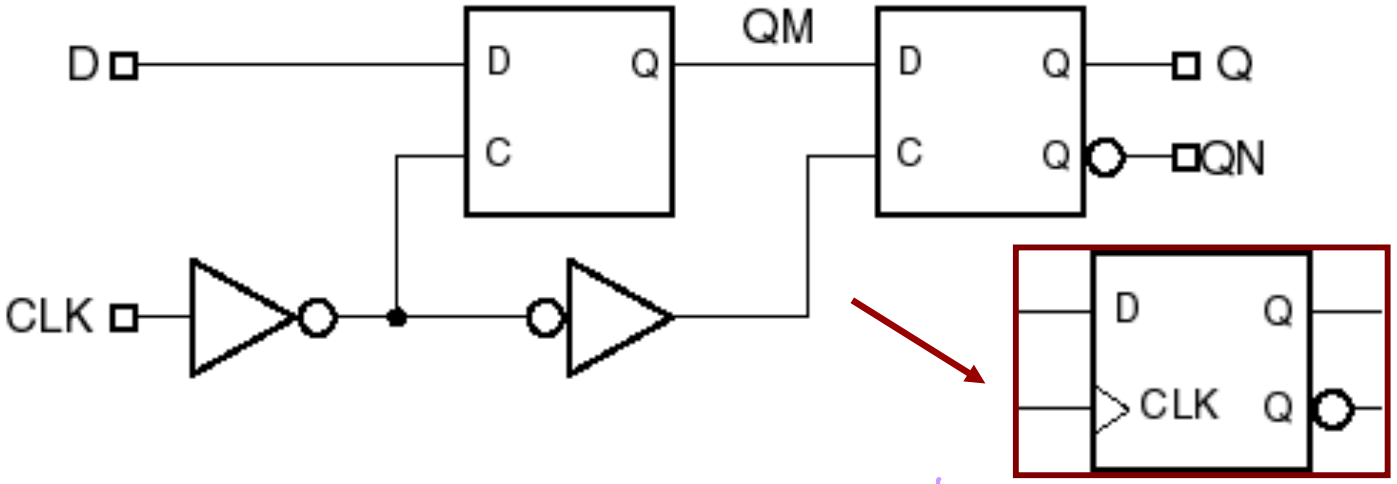

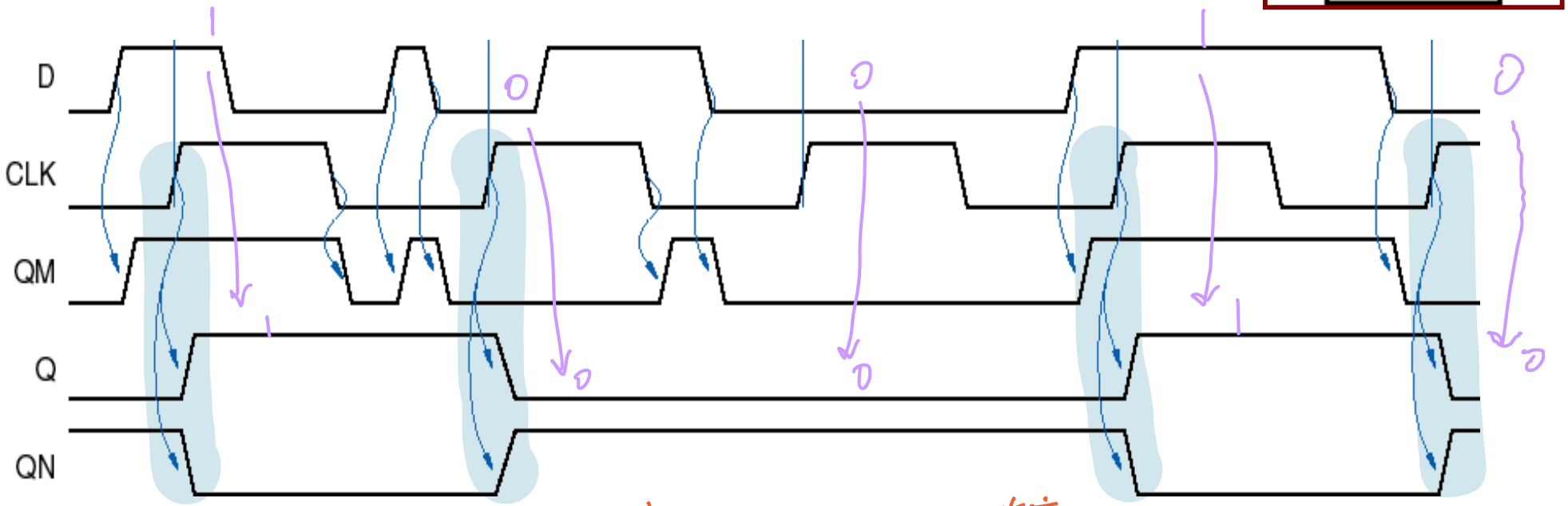

此例中 只在CLK↑时改变.
Q照着D改变

D Flip-Flop: Timing Parameters

- Timing parameters:
  - **Propagation delay** (from CLK).
  - **Setup time** (*D* before CLK).
  - **Hold time** (*D* after CLK).

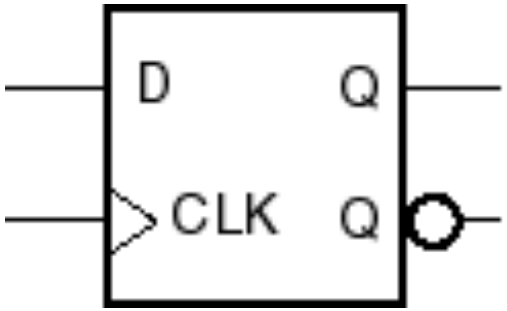

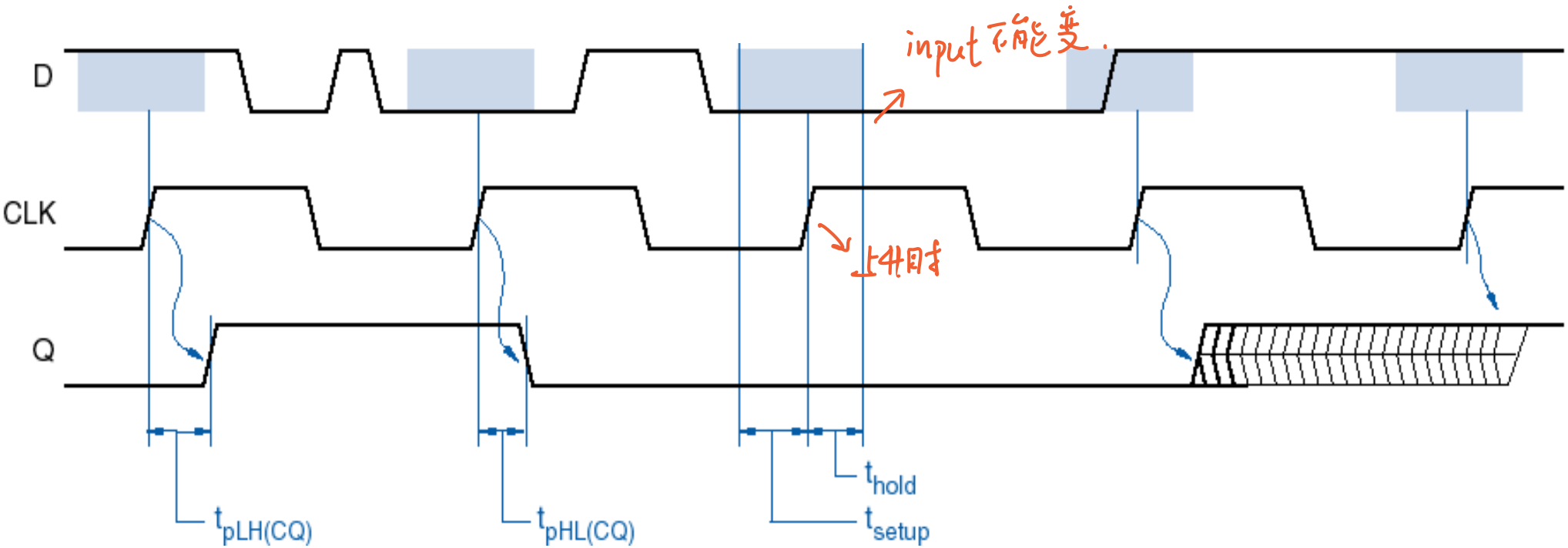

Other D Flip-Flop Variations

- ***Negative-edge triggered***: By inverting the clock input, all the action takes place on the falling edge of CLK_L (active low).
- It is the same as the first *master-slave flip-flop* we looked at!

D	CLK_L	Q	QN
0	↓	0	1
1	↓	1	0
x	0	last Q	last QN
x	1	last Q	last QN

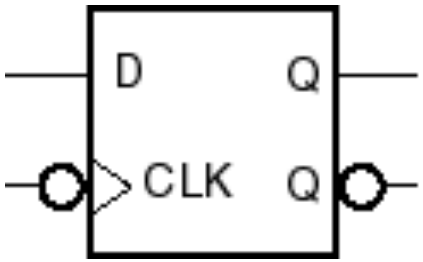

和Master那个一样.

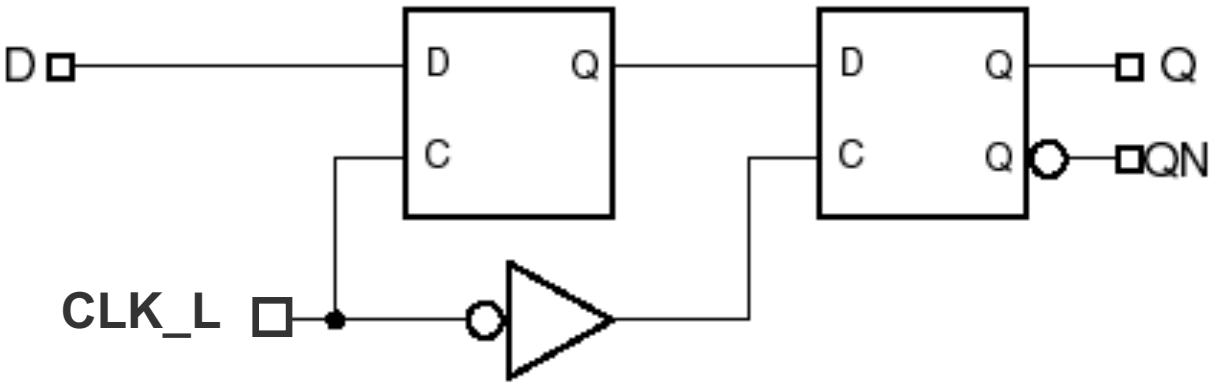

Edge Triggered JK Flip-Flop

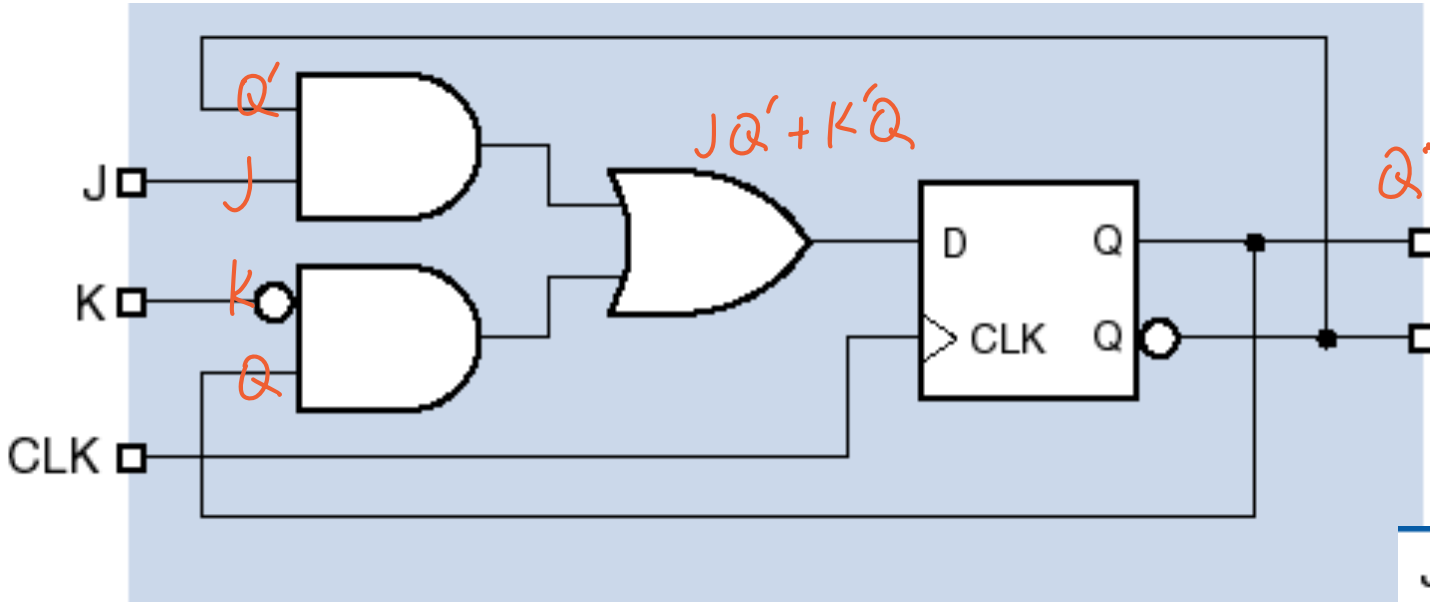

$Q^* = JQ' + K'Q$

时间段.

J	K	CLK	Q	QN
x	x	0	last Q	last QN
x	x	1	last Q	last QN
0	0	↑	last Q	last QN
0	1	↑	0	1
1	0	↑	1	0
1	1	↑	last QN	last Q

Toggle

时间点..

Solves the 1's and 0's catching problem of the master-slave!

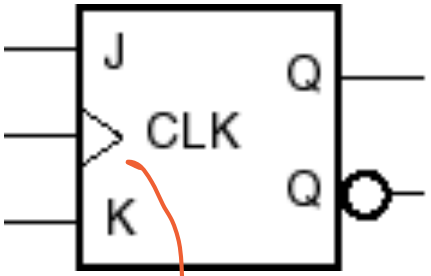

edge triggered

Toggle flip-flop (T-Flip-Flop)

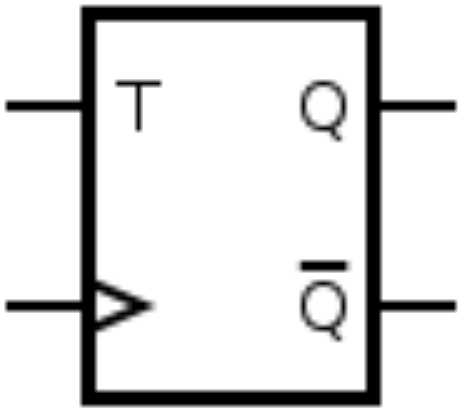

T	Q	Q’
0	0	0
0	1	1
1	0	1
1	1	0

- Using **T-Flip-Flops** the next state output is always *toggled*.
- The toggle flip-flop changes state when the input **T = 1**, and remains unchanged when **T = 0**.

Toggle flip-flop (T-Flip-Flop)

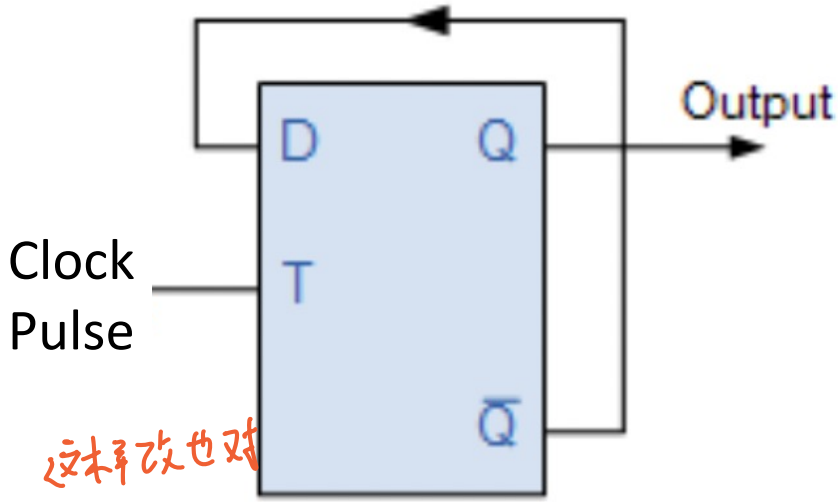

这样改也对

EN

D Flip-flop Conversion

T

T

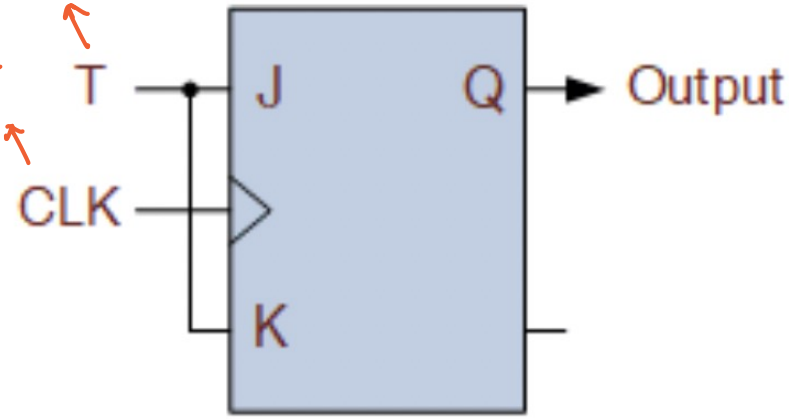

JK Flip-flop Conversion

- The D-type flip-flop can be converted to a T flip-flop by connecting the Q' output directly to the D-input with the toggling signal **T being the clock input**. So, when the D flip-flop is triggered by the clock (T=1), the next Q output will be the **compliment of the current Q**.
- The JK flip-flop can be converted to a toggle flip-flop by connecting both the J and K inputs together. So, when both J and K are 0 (T=0), we have **last Q** as the output and when both J and K are 1, the output **changes state.**

Queen Mary University of London

EN为0：nothing happen

EN为1：可以Toggle

Applications of Flip-Flops (1/2)

- **Parallel Data Storage**:
  - In digital systems, data is normally stored in groups of bits to represent e.g., numbers or codes.
  - We can take several bits of data on parallel lines and store them simultaneously in a group of flip-flops (**Register**).

同时存3个bit

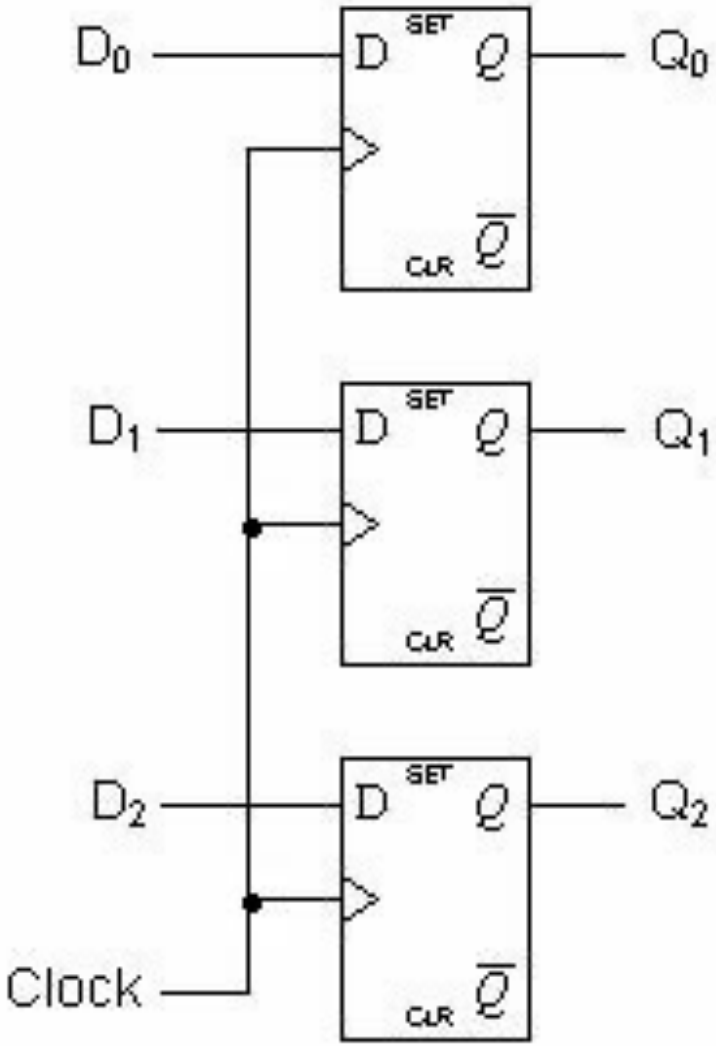

Applications of Flip-Flops (2/2)

- **Digital Counters**:
  - The 2-bit binary sequence is repeated every *4* clock pulses.
  - When it reaches the value *3*, it resets back to *0* and the sequence begins again.

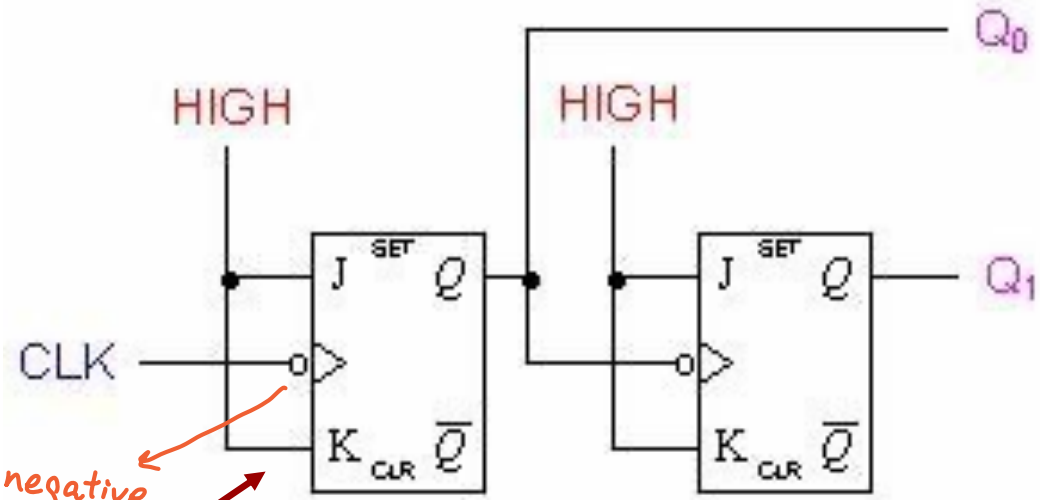

negative edge triggered

找falling的 → 比刹改变

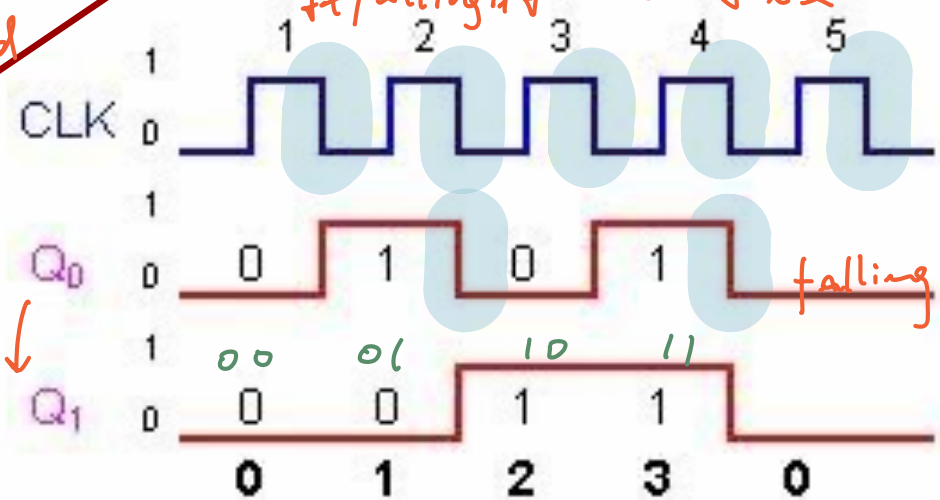

作为它的CLK

You can use **Toggle Flip-Flop** instead

也可以当 frequency divider

frequency 上 输入输出有2倍的关系

计数器 2^n-1

Task 2

- Determine the output states for the flip-flop below, given the pulse inputs shown.

To be completed in class …

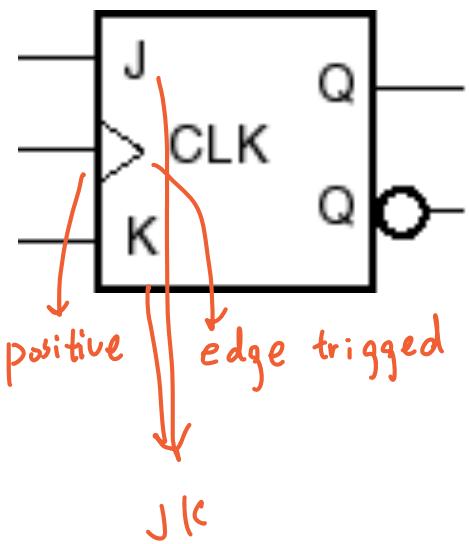

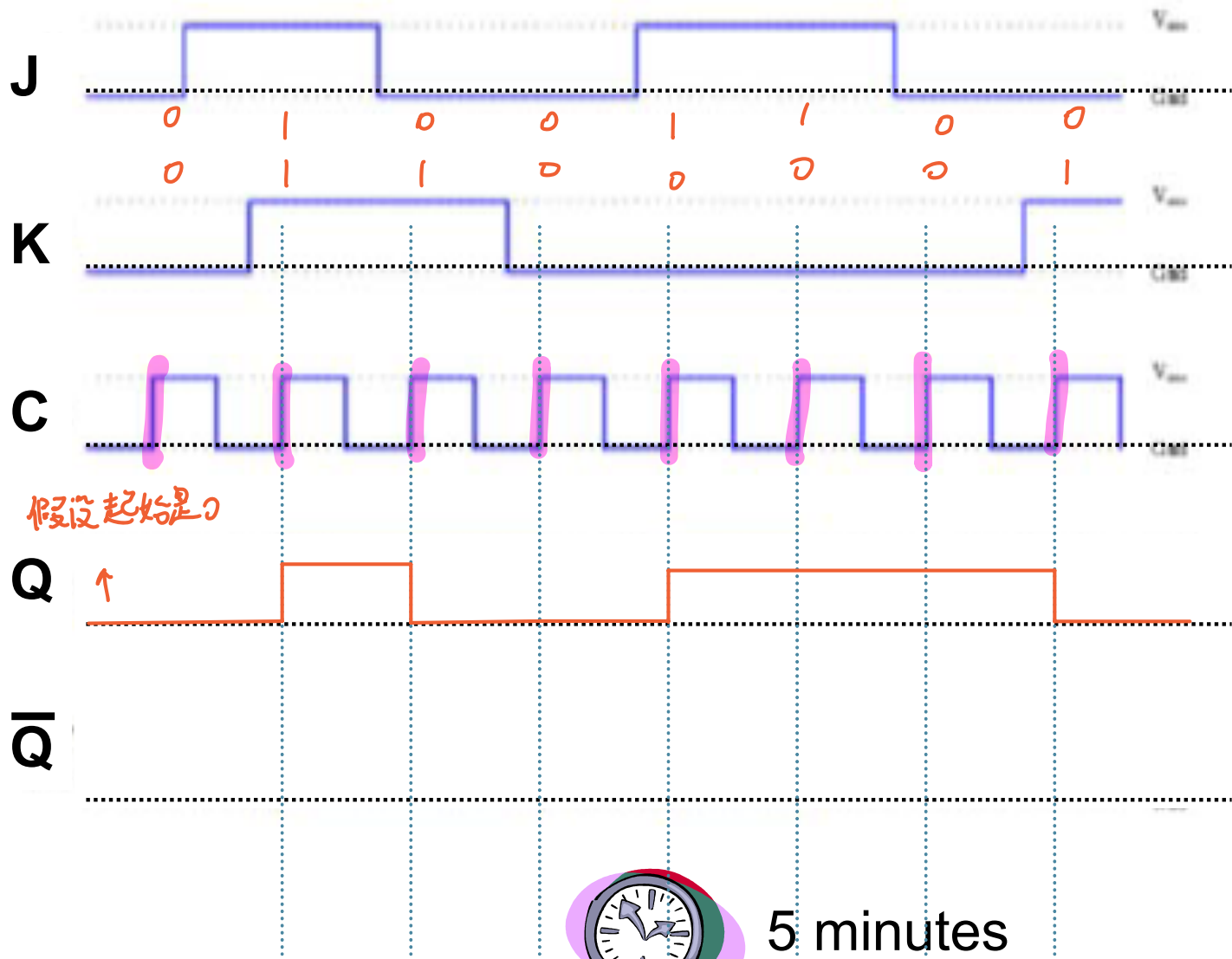

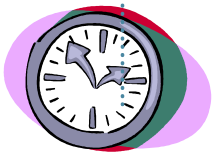

5 minutes